MERCO®

Serving Quality on Demand

Visual Holding Cabinet (MHC)

Parts Manual

This manual is updated as new information and models are released. Visit our website for the latest manual.

8 1 9 7 4 5 9

Part Number: MER_P_8197459 08/2018

WELBILT®

NOTICE

IF, DURING THE WARRANTY PERIOD, THE CUSTOMER USES A PART FOR THIS WELBILT EQUIPMENT OTHER THAN AN UNMODIFIED NEW OR RECYCLED PART PURCHASED DIRECTLY FROM MERCO, OR ANY OF ITS FACTORY AUTHORIZED SERVICERS, AND/OR THE PART BEING USED IS MODIFIED FROM ITS ORIGINAL CONFIGURATION, THIS WARRANTY WILL BE VOID. FURTHER, MERCO AND ITS AFFILIATES WILL NOT BE LIABLE FOR ANY CLAIMS, DAMAGES OR EXPENSES INCURRED BY THE CUSTOMER WHICH ARISE DIRECTLY OR INDIRECTLY, IN WHOLE OR IN PART, DUE TO THE INSTALLATION OF ANY MODIFIED PART AND/OR PART RECEIVED FROM AN UNAUTHORIZED SERVICER.

Table of Contents

MHC-22 Common Components 1
MHC-22L Common Components 3
MHC-24 Common Components 5
MHC-52 Common Components 7
MHC-54 Common Components 9

Replacement Parts List		
Part Number	**Description**	
8263513	Kit, Control, MHC UI Touch	**Critical**
8076202	Switch, DPDT	**Critical**
8076204	Contactor, 120v 40A 2P 5x2, 5x4	**Critical**
8263480	Board, Merco CFA I/O	**Critical**
8076303	Delta Power Supply	**Critical**
8076208	Board, RFID Reader	
8076211	Heater Pad, MHC 2X2 , 2x4	
8076212	Board, MHC Power & Comm 2x2, 2x4	
8076173	Speaker, 4 ohm w/filter	
8076226	Dongle, MHC WIFI	
8076234	Heater Pad, MHC 5X2, 2x2 120v 200w	
8076235	Heater Pad, MHC 5X4 Rt. 120v 140w	
8076236	Heater Pad, MHC 5X4 Lt. 120v 140w	
8076298	Antenna Assy, MHC Center w/gnd 2x4, 5x4	
1087852SP	Antenna Assy, MHC LH Short w/gnd 2x2, 2x4	
1087853SP	Antenna Assy, MHC RH Short w/gnd 2x2, 2x4	
1087945SP	Antenna Assy, MHC LH Long w/gnd 5x2, 5x4	
1087946SP	Antenna Assy, MHC RH Long w/gnd 5x2, 5x4	

MHC-22 Common Components

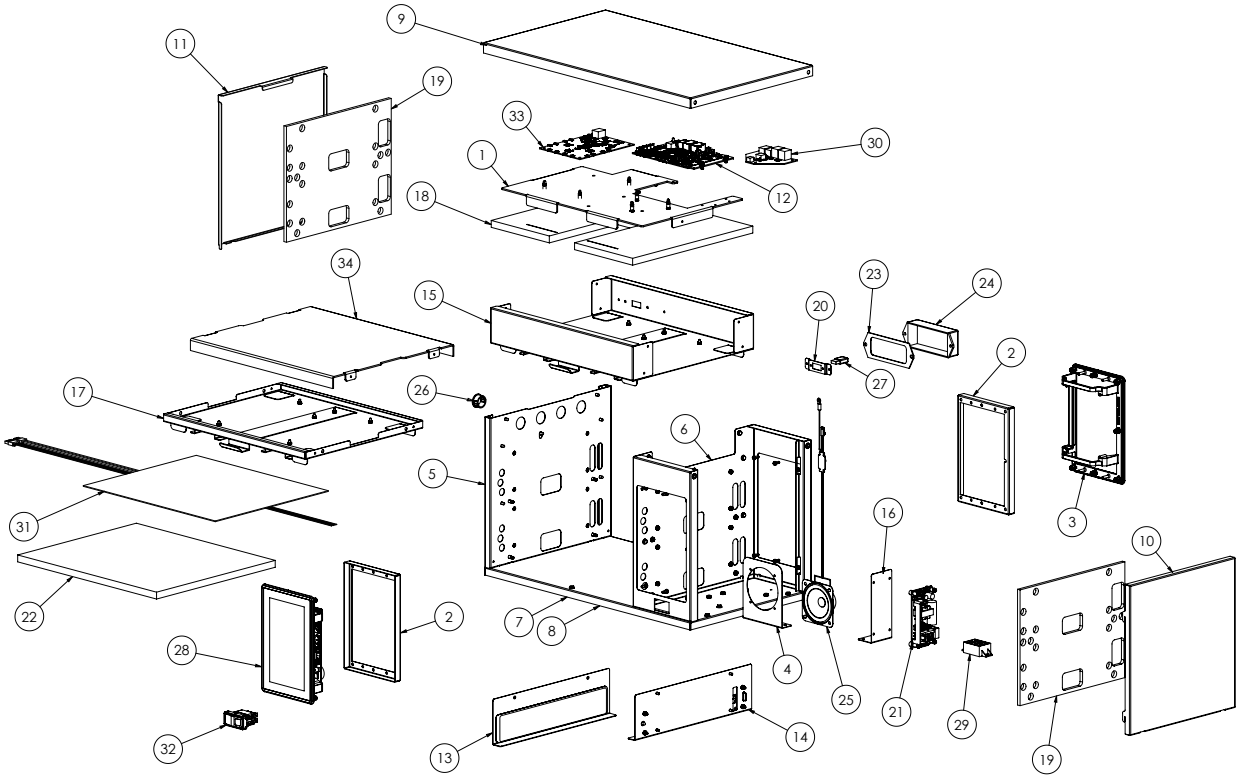

	Item	Description	Part Number	Note
	1	PLATE, ELECTRONICS MHC 2X2	1087662	
	2	BRACKET, TOUCHSCREEN	2601832	
	3	ASSY, DISPLAY PLATE COVER	1087649	
	4	BRACKET, MHC SPEAKER	2601926	
	5	TOWER, MHC 2X2 LEFT	2601950	
	6	TOWER, MHC 2X2 RIGHT	2601951	
	7	BASE, MHC 2X2 TOP	2601954	
	8	BASE, MHC 2X2 BOTTOM	2601956	
	9	PANEL, MHC 2X2 TOP	2601957	
	10	PANEL, MHC 2X2 RT SIDE	2601958	
	11	PANEL, MHC 2X2 LT SIDE	2601959	
√	12	BOARD, MERCO CFA I/O	8263480	
	13	ANTENNA ASSY, MHC LH SHORT	1087852SP	
	14	ANTENNA ASSY, MHC RH SHORT	1087853SP	
	15	HOUSING ASSY, CONTROLS W/LATCH & CHANNELS	1087622	
	16	BRACKET, POWER SUPPLY MHC 2X2	1087665	
	17	SHELF ASSY, MHC 2X2 UPPER	1087629	
	18	INSULATION, TOP MHC 2X2	8161144	
	19	INSULATION, TOWER MHC 2X2	8161141	
	20	BRACKET, MHC USB SPACER	2601980	
√	21	POWER SUPPLY, 12VDC 30W MHC	8076303	
	22	INSULATION, MHC 2X2 BOTTOM/BASE	8161139	
	23	GASKET, MHC WIFI COVER	8161133	
	24	COVER, MHC WIFI	8161132	
	25	SPEAKER, 4 OHM, FILTER, VHC	8076173	
	26	BUSHING, .875 DIA, HOLE 11/16	8100045	
	27	DONGLE, MHC WIFI LM808	8076226	
√	28	CONTROL, MHC UI TOUCH	8263513	
	29	TERMINAL BLOCK, 3 POLE QUICK CONNECT	8076213	

	Item	Description	Part Number	Note
	30	BOARD, MHC POWER & COMM	8076212	
√	31	HEATER PAD, MHC 2X2	8076211	
√	32	SWITCH, DPDT	8076202	
	33	BOARD, RFID READER	8076208	
	34	SHELF, MHC 2X2 HEATER	8104819	
	*	CABLE, COMMUNICATION 8 CONDUCTOR RJ-45	8076011	
	*	ANTENNA, MHC 36" COAX SIDE	8076156	
	*	CABLE, USB PANEL MOUNT 3'	8076172	
	*	CORD,POWER,NEMA 5-15,MHC	8076177	
	*	CABLE, CROSSOVER POWER	8076179	
	*	HARNESS, AC POWER 2X2	8076192	
	*	JUMPER, TOUCH SCREEN ID 2X2M	8076195	
	*	HARNESS, DC POWER 2X2	8076199	
	*	SD CARD CFA	8122549	

* Not Illustrated
√ Critical Parts

MHC-22L Common Components

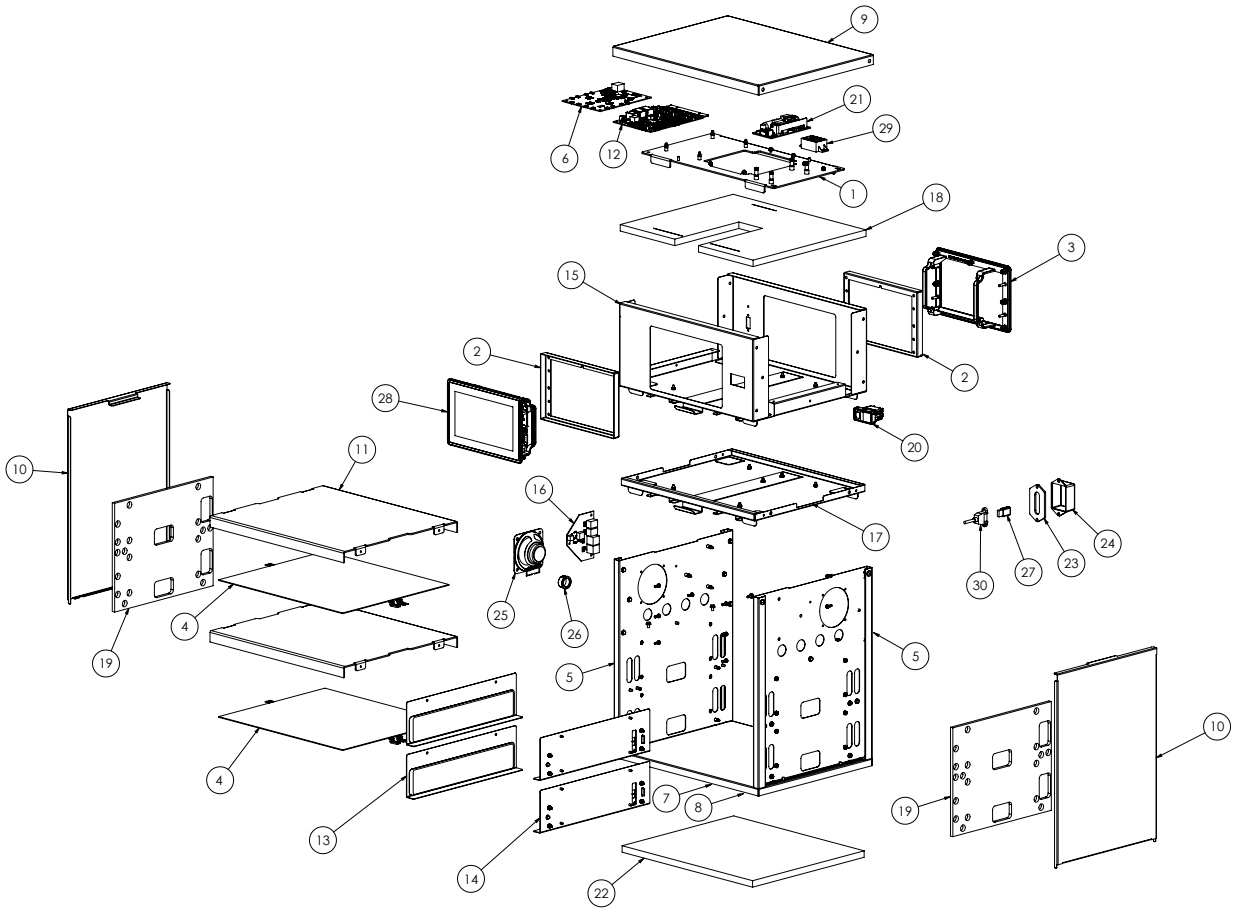

	Item	Description	Part Number	Note
	1	ELECTRONICS PLATE, MHU	1087838	
	2	BRACKET, TOUCHSCREEN	2601832	
	3	ASSY, DISPLAY PLATE COVER	1087649	
√	4	HEATER PAD, MHC 2X2	8076211	
	5	TOWER, MHC 2X2L	2602095	
	6	BOARD, RFID READER	8076208	
	7	BASE, MHC 2X2L TOP	8242470	
	8	BASE, MHC 2X2L BOTTOM	1087842	
	9	PANEL, MHC 2X2 TOP	2602099	
	10	PANEL, MHC 2X2 LT SIDE	2602096	
	11	SHELF, MHC 2X2 HEATER	8104819	
√	12	BOARD, MERCO CFA I/O	8263480	
	13	ANTENNA ASSY, MHC LH SHORT	1087852SP	
	14	ANTENNA ASSY, MHC RH SHORT	1087853SP	
	15	HOUSING ASSY, CONTROLS W/LATCH & CHANNELS	1087841	
	16	BOARD, MHC POWER & COMM	8076212	
	17	SHELF ASSY, MHC 2X2 UPPER	1087629	
	18	INSULATION, TOP MHC 2X2	8161144	
	19	INSULATION, TOWER MHC 2X2	8161141	
√	20	SWITCH, DPDT	8076202	
√	21	POWER SUPPLY, 12VDC 30W MHC	8076303	
	22	INSULATION, MHC 2X2 BOTTOM/BASE	8161139	
	23	GASKET, MERCO WIFI COVER	8161152	
	24	COVER, MERCO WIFI	8161157	

	Item	Description	Part Number	Note
	25	SPEAKER, 4 OHM, FILTER, VHC	8076173	
	26	BUSHING, .875 DIA, HOLE 11/16	8100045	
	27	DONGLE, MHC WIFI LM808	8076226	
√	28	CONTROL, MHC UI TOUCH	8263513	
	29	TERMINAL BLOCK, 3 POLE QUICK CONNECT	8076213	
	30	CABLE, USB PANEL MOUNT 3'	8076172	
	*	CABLE, COMMUNICATION 8 CONDUCTOR RJ-45	8076011	
	*	CORD,POWER,NEMA 5-15,MHC	8076177	
	*	CABLE, CROSSOVER POWER	8076179	
	*	HARNESS, AC POWER 2X2	8076192	
	*	HARNESS, DC POWER 2X2	8076199	
	*	JUMPER, MHC SCREEN ID 2X2L-M	8076307	
	*	SD CARD CFA	8122549	

* Not Illustrated
√ Critical Parts

MHC-24 Common Components

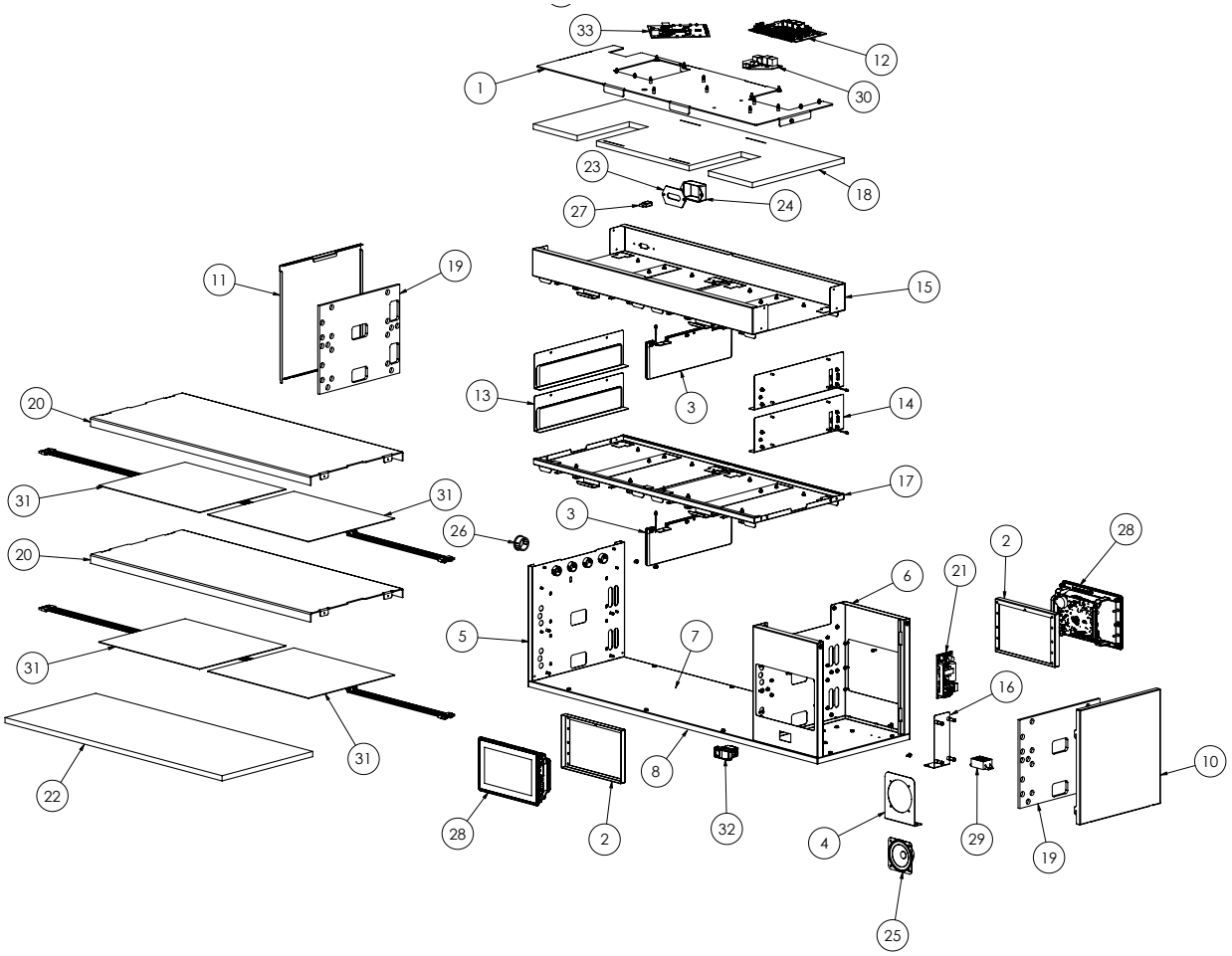

	Item	Description	Part Number	Note
	1	PLATE, ELECTRONICS MHC 2X4	1087766	
	2	BRACKET, TOUCHSCREEN	2601832	
	3	ANTENNA, MHC CENTER GND	8076298	
	4	BRACKET, MHC SPEAKER	2601926	
	5	TOWER, MHC 2X2 LEFT	2601950	
	6	TOWER, MHC 2X4 RH	2601989	
	7	BASE, MHC 2X2 TOP	8242456	
	8	BASE, MHC 2X2 BOTTOM	1087669	
	9	PANEL, MHC 2X2 TOP	2602057	
	10	PANEL, MHC 2X2 RT SIDE	2601958	
	11	PANEL, MHC 2X2 LT SIDE	2601959	
√	12	BOARD, MERCO CFA I/O	8263480	
	13	ANTENNA ASSY, MHC LH SHORT GND	1087852SP	
	14	ANTENNA ASSY, MHC RH SHORT GND	1087853SP	
	15	HOUSING ASSY, MHC 2X4 CONTROLS	1087789	
	16	BRACKET, POWER SUPPLY MHC 2X2	1087665	
	17	SHELF, MHC 2X4 LOWER	1087781	
	18	INSULATION, MHC 2X4 TOP	8161145	
	19	INSULATION, TOWER MHC 2X2	8161141	
	20	SHELF, MHC 2X4 HEATER	8104820	
√	21	POWER SUPPLY, 12VDC 30W MHC	8076303	
	22	INSULATION, MHC 2X4 BOTTOM	8161140	
	23	GASKET, MERCO WIFI COVER	8161152	
	24	COVER, MERCO WIFI	8161157	

	Item	Description	Part Number	Note
	25	SPEAKER, 4 OHM WITH FILTER, VHC	8076173	
	26	BUSHING, .875 DIA, HOLE 11/16	8100045	
	27	DONGLE, MHC WIFI LM808	8076226	
√	28	CONTROL, MHC UI TOUCH	8263513	
	29	TERMINAL BLOCK, 3 POLE QUICK CONNECT	8076213	
	30	BOARD, MHC POWER & COMM	8076212	
√	31	HEATER PAD, MHC 2X2	8076211	
√	32	SWITCH, DPDT	8076202	
	33	BOARD, RFID READER	8076208	
	*	CABLE, COMMUNICATION 8 CONDUCTOR RJ-45	8076011	
	*	CABLE, USB PANEL MOUNT 3'	8076172	
	*	CORD,POWER,NEMA 5-15,MHC	8076177	
	*	CABLE, CROSSOVER POWER	8076179	
	*	CABLE, COMMUNICATION UI TO UI (ONLY ON UNITS with 2 UI's) (2x4 & 5x4)	8076181	
	*	HARNESS, AC POWER 2X4	8076193	
	*	HARNESS, DC POWER 2X4	8076194	
	*	JUMPER, TOUCH SCREEN ID 2X4 MASTER (FRONT)	8076196	
	*	JUMPER, TOUCH SCREEN ID 2X4 SLAVE (REAR)	8076198	
	*	SD CARD CFA	8122549	

* Not Illustrated
√ Critical Parts

MHC-52 Common Components

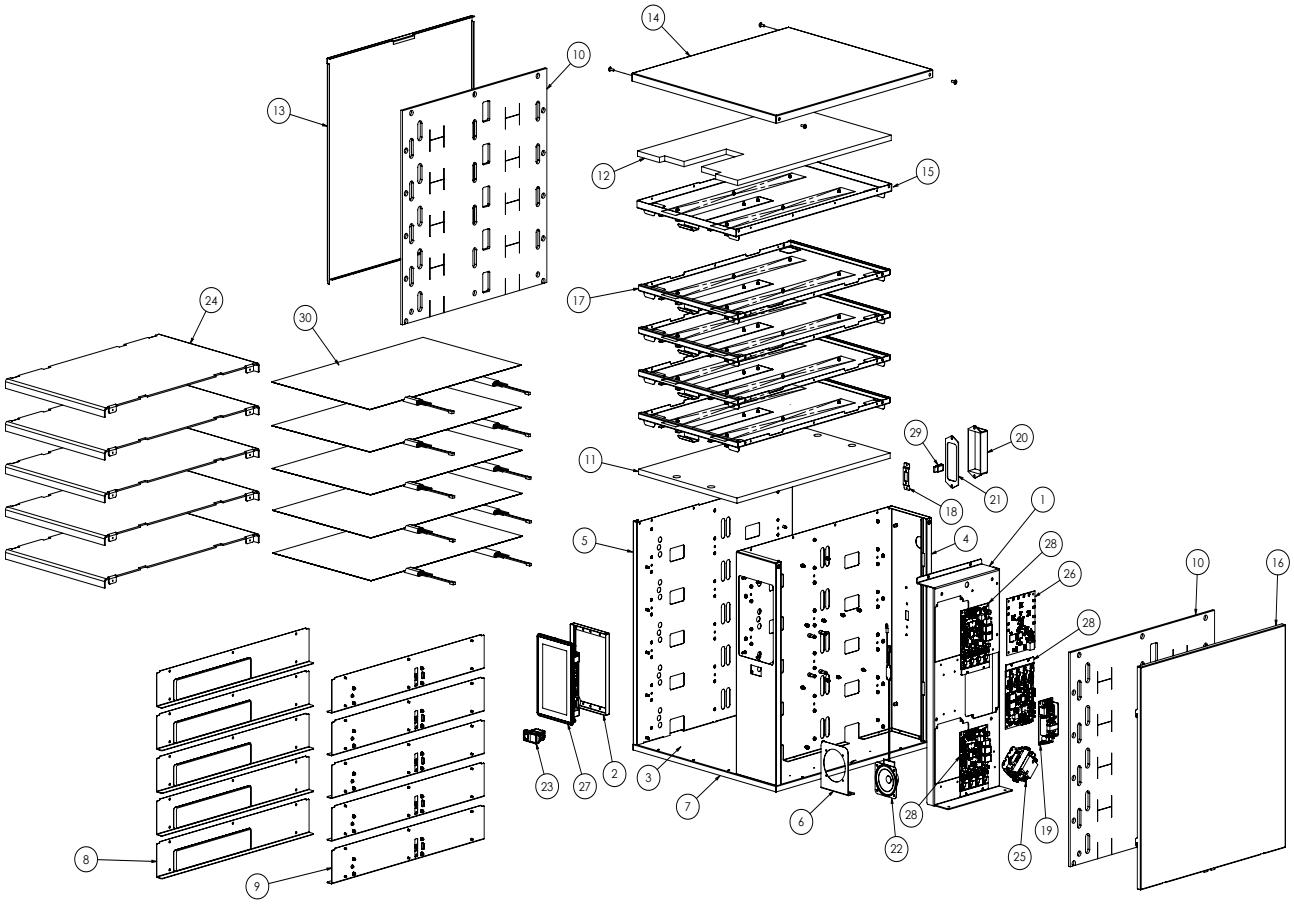

	Item	Description	Part Number	Note
	1	BRACKET, MHC 5X2 ELECTRONICS	2401628	
	2	BRACKET, TOUCHSCREEN	2601832	
	3	BASE, MHC 5X2 TOP	8242447	
	4	TOWER, MHC 5X2 RIGHT	2601905	
	5	TOWER, MHC 5X2 LEFT	2601906	
	6	BRACKET, MHC SPEAKER	2601926	
	7	BASE, ASSY MHC 5X2 BOTTOM	1087606	
	8	ANTENNA ASSY, MHC LH LONG	1087945SP	
	9	ANTENNA ASSY, MHC RH LONG	1087946SP	
	10	INSULATION, TOWER MHC 5X4	8161134	
	11	INSULATION, MHC 5X2 BOTTOM	8161136	
	12	INSULATION, TOP MHC 5-HIGH	8161143	
	13	PANEL, MHC 5X2 SIDE	2601930	
	14	PANEL, MHC 5X2 TOP	2601931	
	15	SHELF, ASSY MHC 5X2 UPPER	1087619	
	16	PANEL, MHC 5X2 RH SIDE	2601955	
	17	LOWER SHELF ASSY, MHC 5X2	1087616	
	18	BRACKET, MHC USB SPACER	2601980	
√	19	POWER SUPPLY, 12VDC 30W MHC	8076303	
	20	COVER, MHC WIFI	8161132	
	21	GASKET, MHC WIFI COVER	8161133	
	22	SPEAKER, 4 OHM, FILTER, VHC	8076173	
√	23	SWITCH, DPDT	8076202	
	24	SHELF, HEATER MHC 5X2	8104824	
√	25	CONTACTOR, 120V 40A 2P	8076204	
	26	BOARD, RFID READER	8076208	

	Item	Description	Part Number	Note
√	27	CONTROL, MHC UI TOUCH	8263513	
√	28	BOARD, MERCO CFA I/O	8263480	
	29	DONGLE, MHC WIFI LM808	8076226	
√	30	HEATER, MHC 5X2 120V 200W	8076234	
	*	CABLE, USB PANEL MOUNT 3'	8076172	
	*	JUMPER, TOUCH SCREEN ID 5X2M	8076184	
	*	HARNESS, DC POWER 5X2	8076185	
	*	HARNESS, AC POWER 5X2	8076186	
	*	CORD, POWER 5-20P 90 DEGREE	8076190	
	*	SD CARD CFA	8122549	

* Not Illustrated
√ Critical Parts

MHC-54 Common Components

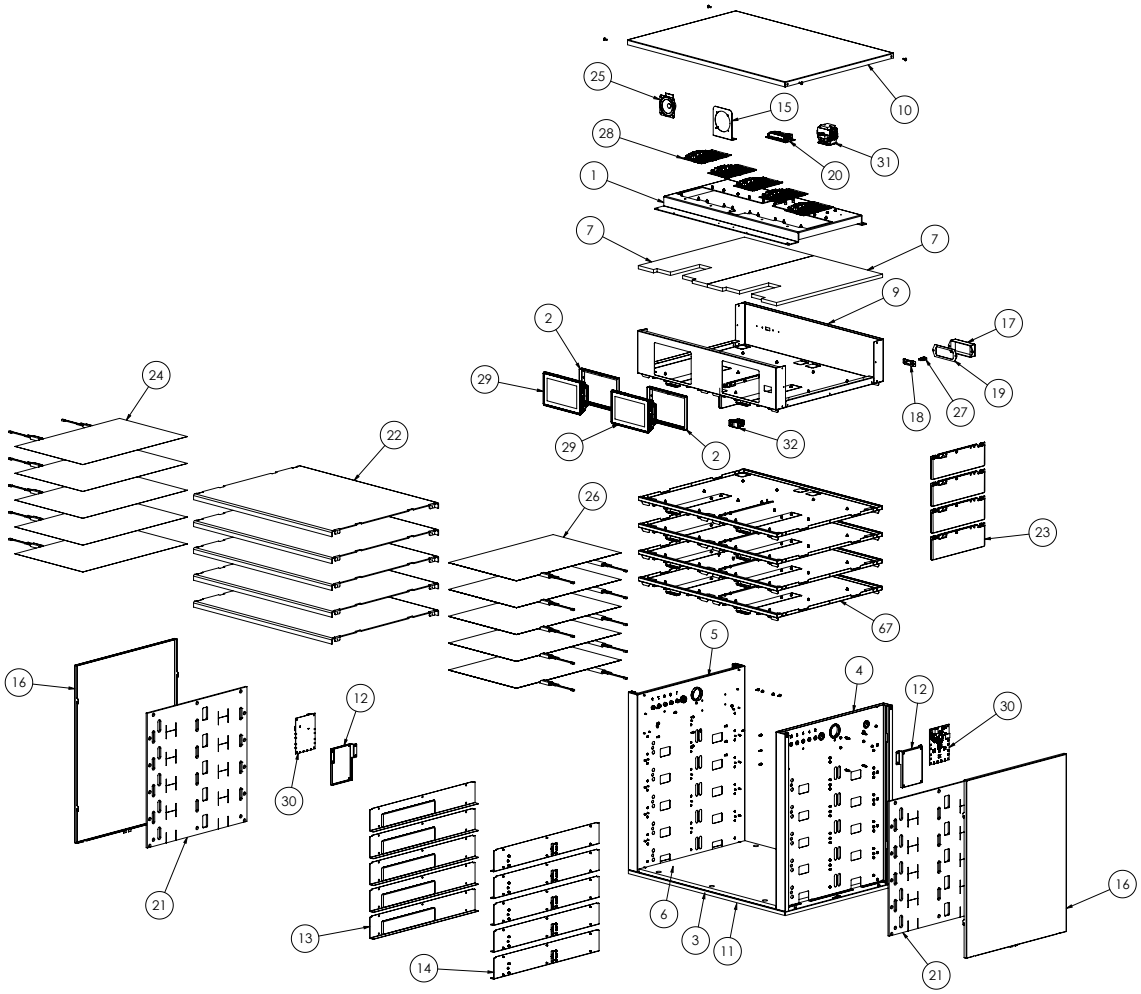

	Item	Description	Part Number	Note
	1	PLATE, ELECTRONICS MHC 5X4	1087661	
	2	BRACKET, TOUCHSCREEN	2601832	
	3	BASE, ASSY MHC 5X4 TOP	8242451	
	4	TOWER, MHC 5X4 RIGHT	2601890	
	5	TOWER, MHC 5X4 LEFT	2601891	
	6	INSULATION, MHC 5X4 BASE	8161135	
	7	INSULATION, TOP MHC 5-HIGH	8161143	
	8	LOWER SHELF ASSY, MHC 5X4	1087643	
	9	CONTROL HOUSING, MHC 5X4	1087642	
	10	PANEL, TOP MHC 5X4	2601897	
	11	BASE, ASSY MHC 5X4 BOTTOM	1087638	
	12	READER, MHC BOARD MOUNT	2601921	
	13	ANTENNA ASSY, MHC LH LONG GND	1087945SP	
	14	ANTENNA ASSY, MHC RH LONG GND	1087946SP	
	15	BRACKET, MHC SPEAKER	2601926	
	16	PANEL, SIDE MHC 5X4	2601927	
	17	COVER, MHC WIFI	8161132	
	18	BRACKET, MHC USB SPACER	2601980	
	19	GASKET, MHC WIFI COVER	8161133	
√	20	POWER SUPPLY, 12VDC 30W MHC	8076303	
	21	INSULATION, TOWER MHC 5X4	8161134	
	22	SHELF, HEATER MHC 5X4	8104825	
	23	ANTENNA, MHC CENTER	8076298	

	Item	Description	Part Number	Note
	24	HEATER, MHC 5X4 120V 140W LH	8076236	
	25	SPEAKER, 4 OHM, FILTER, VHC	8076173	
√	26	HEATER, MHC 5X4 120V 140W R	8076235	
	27	DONGLE, MHC WIFI LM808	8076226	
√	28	BOARD, MERCO CFA I/O	8263480	
√	29	CONTROL , MHC UI TOUCH	8263513	
	30	BOARD, RFID READER	8076208	
√	31	CONTACTOR, 120V 40A 2P	8076204	
√	32	SWITCH, DPDT	8076202	
	*	CABLE, COMMUNICATION 8 CONDUCTOR RJ-45	8076011	
	*	CABLE, USB PANEL MOUNT 3'	8076172	
	*	CABLE, CROSSOVER POWER	8076179	
	*	CABLE, COMMUNICATION UI TO UI (ONLY ON UNITS with 2 UI's) (2x4 & 5x4)	8076181	
	*	JUMPER, TOUCH SCREEN ID 5X4M	8076182	
	*	JUMPER, TOUCH SCREEN ID 5X4S	8076183	
	*	HARNESS, DC POWER 5X4	8076187	
	*	HARNESS, AC POWER 5X4 RIGHT	8076188	
	*	HARNESS, AC POWER 5X4 LEFT	8076189	
	*	ASSY,10/3 CORD,L5-30P,8'	8076216	
	*	SD CARD CFA	8122549	

* Not Illustrated
√ Critical Parts

MERCO

Serving Quality on Demand

MERCO
8700 LINE AVENUE, SHREVEPORT, LA 71106-6800
877-392-7770
WWW.MERCOPRODUCTS.COM
WWW.MERCOMAX.COM

WELBILT®

Bringing innovation to the table

WWW.WELBILT.COM

Welbilt provides the world's top chefs, and premier chain operators or growing independents with industry leading equipment and solutions. Our cutting-edge designs and lean manufacturing tactics are powered by deep knowledge, operator insights, and culinary expertise. All of our products are backed by KitchenCare® – our aftermarket, repair, and parts service.

- CLEVELAND
- CONVOTHERM®
- DELFIELD®
- FITKITCHEN™
- FRYMASTER®
- GARLAND
- KOLPAK®
- LINCOLN
- MANITOWOC®
- MERCO®
- MERRYCHEF®
- MULTIPLEX®

©2018 Welbilt Inc. except where explicitly stated otherwise. All rights reserved. Continuing product improvement may necessitate change of specifications without notice.
Part Number: MER_P_8197459 08/2018