GARLAND

CFA Garland Grill 2.0

Electric Dual Side Clamshell Grill

Installation, Operation and Maintenance Manual

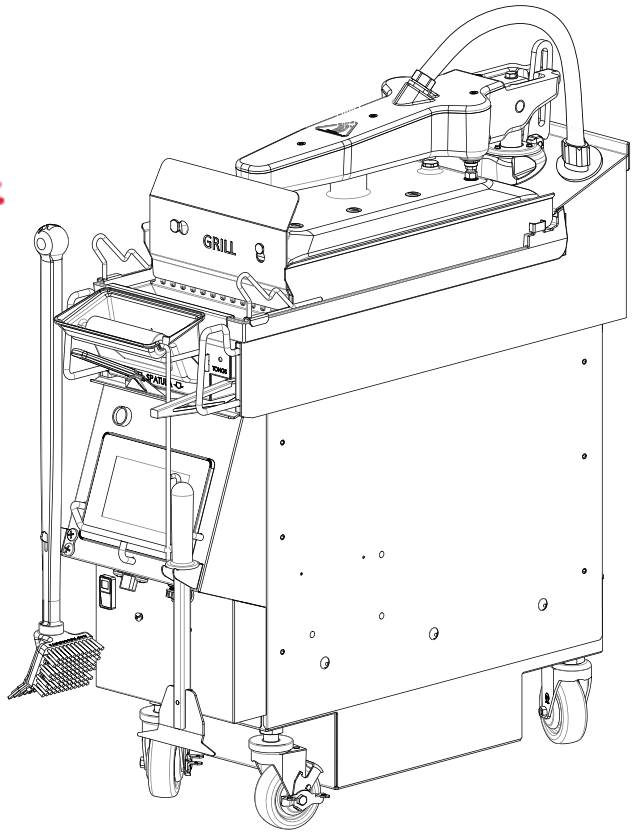

model:

CXPB12

Garland CFA Hot-Line:

1-800-379-7278

Document Number: GAR_IOM_CFABROILER_4603091 rev 00 (08/21/2017)

WELBILT

READ THIS MANUAL

⚠Warning

Read this manual thoroughly before installing, operating, or performing maintenance on the equipment. Failure to follow instructions in this manual can cause property damage, injury or death.

This manual must always be available for reference at the place of operation.

Important

Do not use this manual for other models that are not specified on the front cover of this manual.

SERVICE SUPPORT

Garland CFA Hot-Line: 1-800-379-7278

IMPORTANT:

Store Number, Location

Model Number: **CXPB12**

Serial Number

Date of Installation

ABOUT THIS MANUAL

Throughout this manual, the appliance model indicated on the cover page is referred to as **appliance** or **equipment** or **unit.**

A period (.) is used in this manual as the decimal separator.

Original measurements are in imperial. Measurements in metrics are provided for reference.

INSPECT THE SHIPMENT

- Thoroughly inspect the equipment upon delivery.
- Check packing slip / accessories list to ensure all parts are delivered.
- Contact factory immediately if any problem or damages with the shipment.

KEEP THE PACKING SLIP (IF APPLICABLE)

The packing slip attached to the shipment contains detailed information on all components. Keep the packing slip for reference.

TEMPORARY STORAGE

Garland provides adequate protection under normal conditions in transit and storage. The appliance may need additional protection if it is stored near salt water, a tropical area, or other unfavorable conditions. Please contact Garland immediately if these conditions occur.

Tip: Put Canola oil on cooking surfaces of upper and lower cast iron grates to prevent rusting before transport.

SHIPPING DAMAGE CLAIM PROCEDURE

Please note that the Garland equipment was carefully inspected and packed by skilled personnel before leaving the factory. The transportation company assumes full responsibility for safe delivery upon acceptance of the equipment. What to do if the equipment arrives damaged:

1. File a claim immediately regardless of the extent of damage.
2. Be sure to note, "visible loss or damage," on the freight bill or express receipt and have the person making the delivery sign it.
3. Concealed loss or damage: if damage is unnoticed until the equipment is unpacked, notify the freight company immediately, and file a concealed damage claim.

Safety Notices

DEFINITIONS

⚠ DANGER

Indicates a hazardous situation that, if not avoided, will result in death or serious injury. This applies to the most extreme situations.

⚠ Warning

Indicates a hazardous situation that, if not avoided, could result in death or serious injury.

⚠ Caution

Indicates a hazardous situation that, if not avoided, could result in minor or moderate injury.

Notice

Indicates information considered important, and is used to address practices not related to physical injury. For example, messages relating to property damage.

NOTE: Indicates useful, extra information about the procedure you are performing.

Reference: ANZI Z535.6-2011

SAFETY SYMBOLS AND WARNINGS ON APPLIANCE

⚠ Warning

Warning labels mounted directly on the equipment must be observed at all times and kept in a fully legible condition.

DISCLAIMERS

⚠ DANGER

Do not install or operate equipment and/or accessories that have been misused, abused, neglected, damaged, or altered from that of original manufactured specifications.

⚠ DANGER

Improper installation, adjustment, alteration, service, or maintenance of this appliance or installation of a damaged appliance can result in DEATH, INJURY, EQUIPMENT DAMAGE, and void the warranty.

⚠ DANGER

All utility connections and fixtures must be maintained in accordance with local and national codes.

⚠ DANGER

KEEP APPLIANCE AREA FREE AND CLEAR OF COMBUSTIBLES.

⚠ DANGER

It is the responsibility of the equipment owner to perform a Personal Protective Equipment Hazard Assessment to ensure adequate protection during maintenance procedures.

⚠ DANGER

The on-site supervisor is responsible for ensuring that operators are made aware of the inherent dangers of operating this equipment.

⚠ Warning

This equipment must be installed and commissioned by a Factory Authorized Service technician.

⚠ Warning

Do not store or use gasoline or other flammable vapors or liquids in the vicinity of this or any other appliance. Never use flammable oil soaked cloths or combustible cleaning solutions for cleaning.

⚠ Warning

This appliance is not intended for use by persons (including children) with reduced physical, sensory or mental capabilities, or lack of experience and knowledge, unless they have been given supervision concerning use of the appliance by a person responsible for their safety. Do not allow children to play with this appliance.

⚠ Warning

This product contains chemicals known to the State of California to cause cancer and/or birth defects or other reproductive harm. Operation, installation, and servicing of this product could expose you to airborne particles of glass-wool or ceramic fibers, crystalline silica, and/or carbon monoxide. Inhalation of airborne particles of glass-wool or ceramic fibers is known to the State of California to cause cancer. Inhalation of carbon monoxide is known to the State of California to cause birth defects or other reproductive harm.

Safety Notices (continued)

Notice

This appliance is not approved or authorized for home or residential use, but is intended for commercial applications only. The manufacturer and/or authorized representative will not provide service, warranty, maintenance or support of any kind other than in commercial applications.

Notice

Routine adjustments and maintenance procedures outlined in this manual are not covered by the warranty.

LOCATION

⚠Warning

To avoid instability the installation area must be capable of supporting the combined weight of the equipment and product. Additionally the equipment must be level per instructions given in this manual, section 2 Installation.

⚠Warning

No structural material on the appliance should be altered or removed to accommodate placement of the appliance under a hood.

⚠Caution

This equipment must be operated under an approved hood system in accordance with local regulations in force. This unit is intended for indoor use only.

CODE

⚠Warning

Authorized Service Representatives are obligated to follow industry standard safety procedures, including, but not limited to, local/national regulations for disconnection / lock out / tag out procedures for all utilities including electric, gas, water and steam.

Important

Additional Safety Notices are stated in the relevant sections throughout the manual.

Table of Contents

Safety Notices **3**
- Definitions 3
- Safety Symbols And Warnings On Appliance 3
- DISCLAIMERS 3
- LOCATION 4
- CODE 4

Section 1 General Information

Warranty **7**
Comparing Major Components on CFA Garland Grill 1.0 and 2.0 ..... **8**

Section 2 Installation

Specifications **11**
- Rating Plate Location 11
- Electrical Specifications, Model: CXPB12 (USA/Canada, 208v and 220V) 11
- Clearance Requirements 11

Removing Equipment from Wood Crate **12**
Installation Requirements **13**
- Code 13
- Location 13
- Ventilation 13
- Exhaust Hood Requirements 13

Installation Instructions **14**
- Transporting Equipment To Location 14
- Appliances Equipped with Casters 15
- Removing Docking Station 15
- Leveling 16
- Back Caster orientation 16
- Adjusting the Casters 16
- Removing Stainless Steel Plastic Film Cover 17
- Removing the "Desi Pak" bags (If Required) 17
- Electrical Connection 18

Start-Up and Function Test **18**

Section 3 Operation

Controls **21**
Sequence of Operation **21**
Accessories and Attachments **22**
- Installing and Using the accessories 23

Cooking Procedure **25**
- Sleep Mode and Warning 25
- Preparing Grill for Use & Release Agent 25
- Putting Products on Grill 26
- Aborting a cook cycle 26
- Adding additional cook time 26
- Table: CFA Product Lay Pattern Summary 27

easyTOUCH™ Quick Reference **28**
easyTOUCH™ Controller **29**
Frequently used screens 29
Icons & Functions 29
On Screen Warnings and Alerts Messages 30
Operations Overview 30
easyTOUCH™ Procedures **31**
Start Up & Preheat 31
Cooking A Recipe 32
Check Temperatures 33
Canceling a Cook Cycle 33
Change Cook Time/Gap 33
Activate Sleep Mode Manually 34
Shutdown 34
Cleaning Reminders 34
easyTOUCH™ All Recipes (password protected) **35**
Editing a recipe 35
easyTOUCH™ Settings (password protected) **36**
Entering Password In Other Languages 36
Thermocouple Calibration 36
Language 36
Import/export (from usb) 37
Sleep Configuration 38
Volume Adjustment 38
User Interface 39
Platen Calibration 39
Soft Reset 40
Diagnostics **40**
Advanced—Component Life Tracing 40

Section 4
Cleaning & Maintenance

Moving the Grill **42**
Cleaning Procedure **43**
Cleaning Schedule **43**
Cleaning after Each Batch **43**
Cleaning and Sanitizing Grill Exterior **44**
Cleaning Grill at Midday **44**
End of Day Cleaning **46**
Areas of grill to clean 46
Tools and Attachments to Clean 48
Annual Grill Certification **48**
Benefits 48
Tasks and Parts 48
When Problem Occurs **49**
Error Messages On Display **49**

Section 5
Troubleshooting

Retrieving Error Codes On Display **50**
Cooking Issues **51**
Display Screen / User Interface (UI) Controller Issues **53**

Section 1
General Information

Warranty

Garland Commercial Ranges, Ltd. ("Garland") covers this product (the "Product") for defects in material and workmanship under normal use and service for a period of two (2) years or 84,000 cycles, whichever comes first. The Product warranty coverage commences from the date the Product is installed or six (6) months from date of shipment (unless stated otherwise), whichever comes first.

Shaft seals are warranted for 1 year or 42,000 cycles, whichever comes first. Replacement shaft seals will be warranted for 1 year or 42,000 cycles, or until the end of the Product warranty, whichever comes first.

During the warranty period, Garland agrees to repair or replace, any part that proves to be defective in material or workmanship at no charge for the part or normal labor unless otherwise specified in this warranty.

EXCLUSIONS:

The following items are not covered under the warranty:

1. Any wear items with less than a two year life expectancy are considered perishable and are not covered under warranty.
2. Failures or performance issues caused by improper electrical supply or erratic voltage outside of UL guidelines.
3. Normal annual or performance maintenance (as covered in this manual) and cleaning are not included in the warranty and are the responsibility of the end user.
4. Damage or problems due to unauthorized modifications or alterations to the Product.
5. Damage or problems caused by accidental or intentional misuse, alteration, abuse, or neglect.
6. Use of non-approved parts, materials, tools or accessories without prior written approval from Garland. Use of non-approved materials, accessories and cleaning tools on the cast iron cooking surfaces will void your warranty.
7. Damage or problems caused by improper operation, cleaning and/or maintenance procedures.
8. Damage or problems caused by fire, floods, storms, or other acts of God that are beyond the control of Garland.
9. Additional labor charges resulting from the inaccessibility of equipment. If a Garland FAS has to spend in excess of 30 minutes cleaning the grill before warranty work begins, this will be charged back to store. Additional estimated costs will be reviewed and approved by the store prior to commencement of the work.
10. Installation and adjustments if not conducted by a Garland factory authorized service agent/company ("FAS") are not covered under this warranty.
11. Products where any permanently affixed labels, warnings, data plates or the warranty serial number affixed to the Product by Garland have been defaced obliterated or removed.
12. This Product is intended exclusively for use in a commercial indoor restaurant kitchen only. Operating unit outdoors or in a non-restaurant setting, including but not limited to food trucks or mobile restaurants, will void the warranty. No warranty is extended for personal, family, or household purposes.

To comply with the provisions of this warranty, a Garland authorized FAS must perform the warranty repair, and an acceptable report for any claim under this warranty must be supplied to Garland.

Garland assumes no responsibility for travel costs beyond two (2) hours and 100 miles/150Kms, travel other than overland, and overtime costs of repair.

Garland will only cover the cost of the parts replacement or repair and/or associated labor.

This warranty is exclusive, limited and is in lieu of all other warranties, expressed or implied. NO IMPLIED WARRANTY OF MERCHANTABILITY OR FITNESS FOR PARTICULAR PURPOSE SHALL APPLY. Garland, our employees, or our agents shall not be held liable for any claims of personal injury, incidental or consequential damage or loss.

This warranty gives you specific legal rights, and you may have other rights which vary from State to State.

Comparing Major Components on CFA Garland Grill 1.0 and 2.0

Users who have used CFA Garland Grill 1.0 will find similar, but very different components and accessories/tools on Grill 2.0. This section provides an overview on the features and differences between Grills 1.0 and 2.0.

	CFA Garland Grill 1.0 (CXBE12)	CFA Garland Grill 2.0 (CXPB12)
Overall		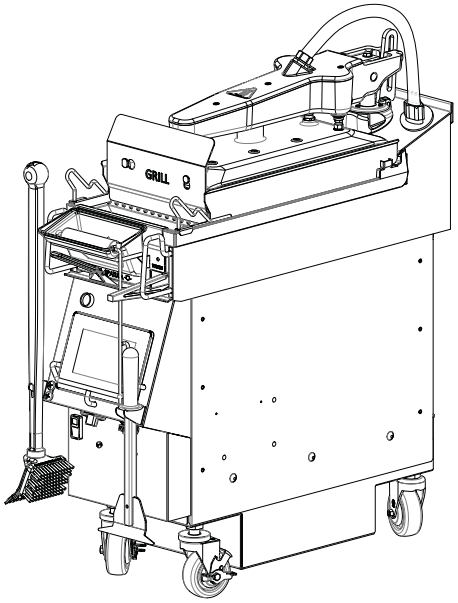
Upper Grate and Cowl Assembly	Top grate is secured to the cowl assembly with a latch at front. Daily cleaning behind the upper grate is required. Heating elements are exposed.	Latch system is not required as an upper cast iron grate is sealed to the cowl assembly. The upper grate cannot be dropped down or opened by operators for the cleaning of the backside of the cook surface. Heaters are embedded and sealed in the cowl assembly.
	One heating element assembly.	New heaters (two identical heaters, front and back). Different thermocouple locations.
	Lifting arm attached to platen at 3 points (two at front, one at back).	New lifting arm has also 3 attachment points (two at back, one at front) plus additional connection to the center of cowl assembly.
	Level platen at front and back.	Level platen at front and/or rear right. New inductive sensors for platen leveling.
	Upper grates with open groves.	Solid one piece, specifically profiled cast iron upper grate.
	Option: Exhaust Fan.	No exhaust fan option as added smoke deflector at front.
		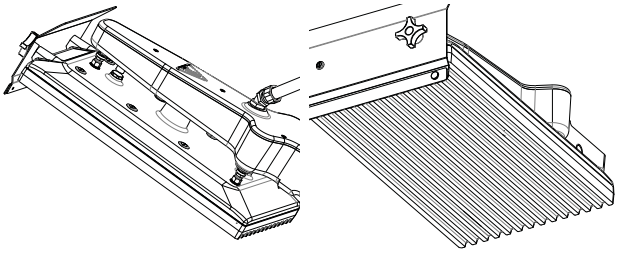

	CFA Garland Grill 1.0 (CXBE12)	CFA Garland Grill 2.0 (CXPB12)
Lower Broiler Box	Lower Broiler Box includes: Lower grates with open groves, IR tent and heating elements.	Solid one piece cast iron lower grate, **sealed completely** to the broiler box. Three new heaters are embedded beneath the grate; two at front are of same size and the one at back is slightly larger.
	Large and long grease tray located below grates.	Grease drawer is located in an compartment at front of broiler box.
		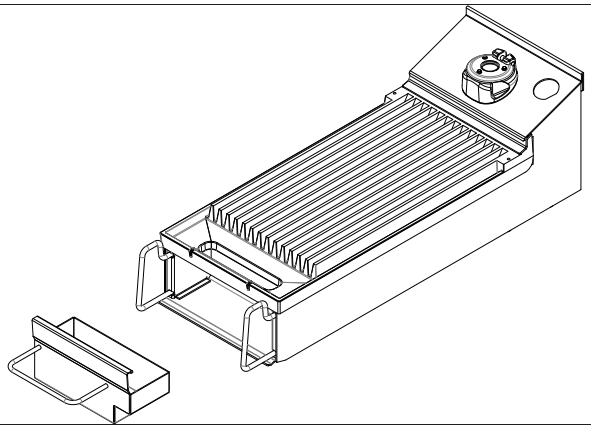
Actuator and Lifting System	Lifting system: one actuator, two shafts, two seals, two pillow blocks, etc.	New Actuator, with one actuator shaft, one seal, one pillow block and new anti-rotate system. New brackets are used to secure new actuator.
Controls & Electronics	SIB Board + Noise Reduction Board	New version of SIB (rev 9).
	SSRB (+ Heatsink Assembly)	New version of SSRB (+ Heatsink Assembly)
	ON-OFF Power Switch for unit; Round Green Push Button for platen and cook-cycle.	Same power switch and push button, same functions.
	User Control Screen with Wire Screen Protector.	Enhanced Touch Screen with new wire protector.
	Control Software, version 2.x.x	New Control Software version 3.x.x
Casters	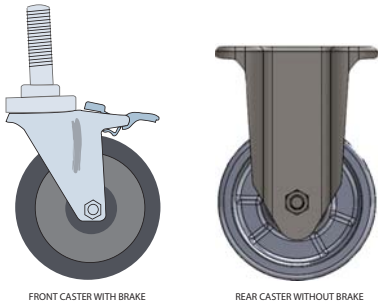 FRONT CASTER WITH BRAKE REAR CASTER WITHOUT BRAKE	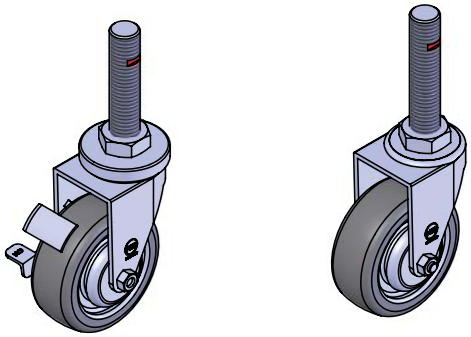

	CFA Garland Grill 1.0 (CXBE12)	CFA Garland Grill 2.0 (CXPB12)
Accessories and Attachments	Broiler box inner shields	New Side Skirts, Left/Right, attached onto lower grate.
	Nugget rack kit, stored below grease drawer	Nugget racks are no longer required.
		New nugget spatula.
	Grease drawer assembly covers full bottom of grates	Grease Drawer (with slot for tongs) at front of lower grate.
	Oil Pan Insert.	New sturdy plastic oil pan. Container for oil pan is no longer required.
	High temperature grill brush	New cleaning brush for the new grate design.
		New front smoke deflector shield.
	Oil roller and handle	Same version of oil roller and handle.
	Tool holder hung below UI screen	New detailing tool for cleaning grates.
	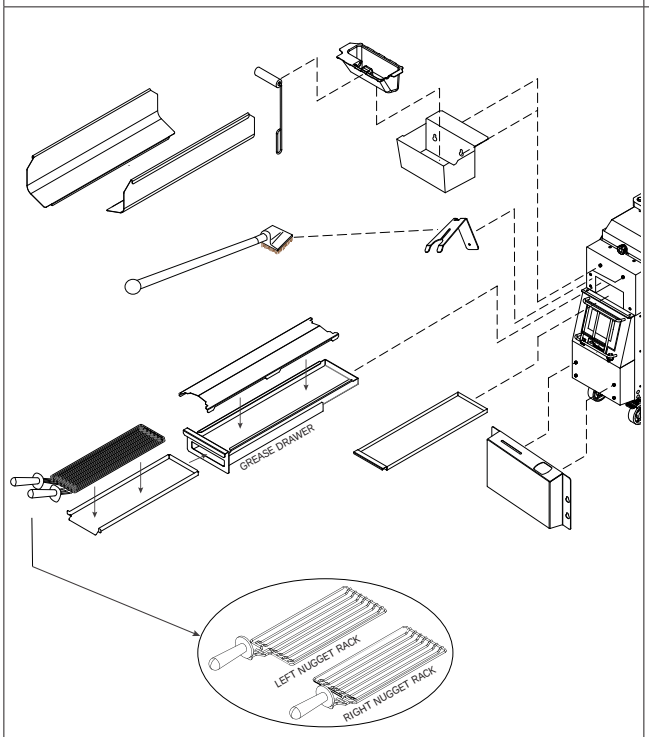	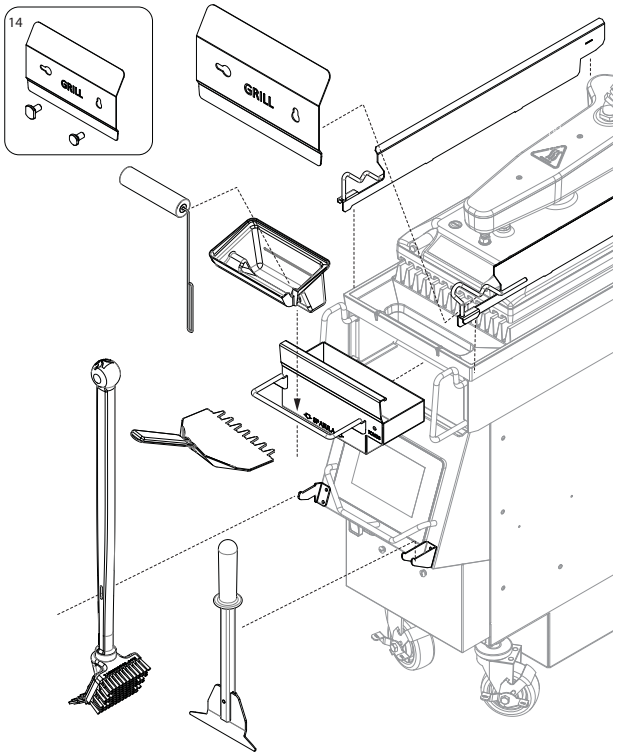

Section 2
Installation

⚠ DANGER

Installation, adjustments, start-up procedure and function test of the appliance must be performed by the manufacturer's service partners (Factory Authorized Service Agencies), following all applicable national and local codes, and health and safety regulations.

Specifications

RATING PLATE LOCATION

The rating plate is affixed to the lower front of the right exterior body side panel.

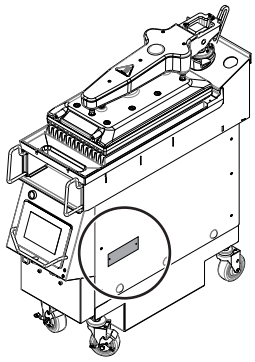

ELECTRICAL SPECIFICATIONS, MODEL: CXPB12 (USA/CANADA, 208V AND 220V)

Voltage	200V	208V	220V	230V	240V
Current L1 (A)	23.2	24.1	23.2	23.4	22.5
Current L2 (A)	27.1	28.2	26.6	26.5	24.9
Current L3 (A)	22.2	23.1	22.0	22.0	20.9
Total Power(kW)	8.3	9.0	8.8	9.2	9.0

NOTE: Wiring diagram is supplied with each unit.

Cable and Plug: Provided with each unit, a 5-foot (1.5m) long power supply cord with an integral (NEMA 15-50P) plug.

CLEARANCE REQUIREMENTS

Minimum Clearance to Non-Combustible Walls / Floor		Minimum Clearance to Combustible Walls / Floor (See Safety Warning Statement below)	
Sides	**Rear**	**Sides**	**Rear**
0″	0″	NOT ALLOWED	NOT ALLOWED

⚠ CAUTION

TO REDUCE THE RISK OF FIRE, THE APPLIANCE IS TO BE INSTALLED IN NON-COMBUSTIBLE SURROUNDINGS ONLY, with no combustible material within 18″ (457 mm) of the sides, front, or rear of the appliance or within 40″ (1 m) above the appliance. The appliance is to be mounted on floors of noncombustible construction with noncombustible flooring and surface finish and with no combustible material against the underside, or on noncombustible slabs or arches have no combustible material against the underside. Such construction shall in all cases extend not less than 12″ (305 mm) beyond the equipment on all sides.

Removing Equipment from Wood Crate

⚠WARNING

Follow the instructions below to safely and easily remove unit from skid. Unit is very heavy! Use Personal Protective Equipment (PPE).

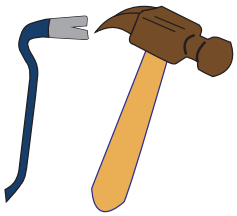

Tools required.

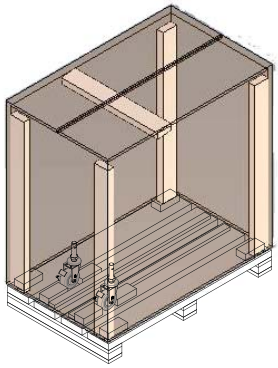

1. Packaging has a top cardboard box and a wood skid.

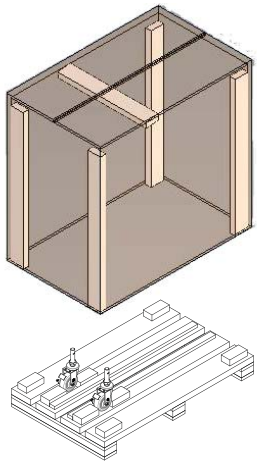

2. Cut the straps and remove the cardboard box covering the unit.

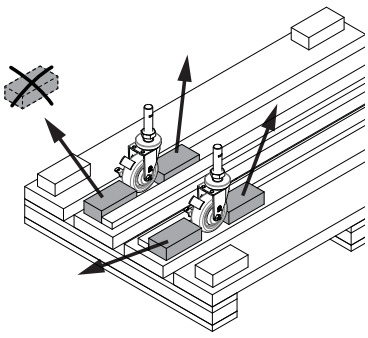

3. Remove and discard the two (2) wood blocks locking each front caster.

⚠CAUTION

ENSURE FRONT CASTER BRAKES ARE ON while removing blocks.

4. Release the front caster brakes and push unit forward off of the skid. Carefully move and guide the unit to roll straight ahead.

⚠CAUTION

Clear the work area and pathway of all packaging waste before moving the equipment.

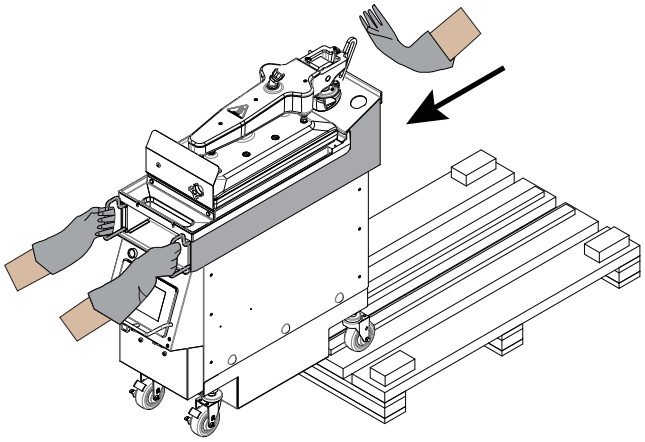

⚠CAUTION

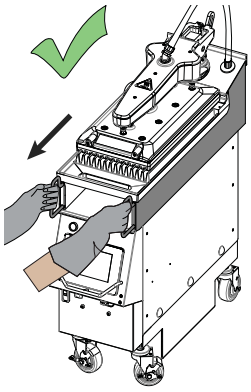

MOVE GRILL USING THE SIDE HANDLES.

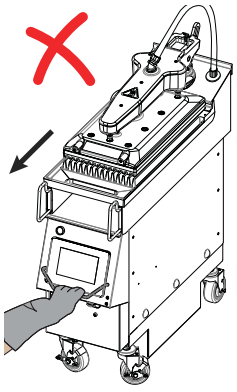

DO NOT MOVE GRILL USING THE SCREEN GUARD.

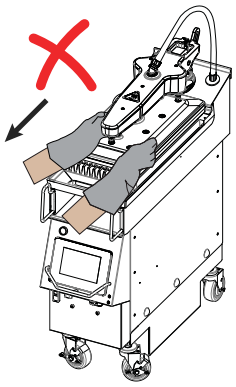

DO NOT MOVE GRILL USING THE PLATEN OR ARM.

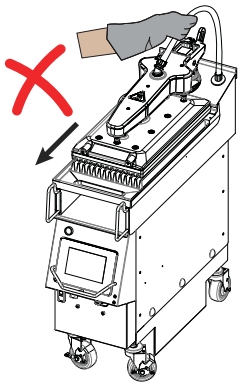

DO NOT MOVE GRILL USING THE CONDUIT.

Installation Requirements

CODE

In the United States the installation must comply with the latest edition of the National Electrical Code ANSI/ NFPA 70 – latest edition and/or local Codes to assure safe and efficient operation.

Installation must be carried out by a factory authorized service representative according to the relevant regulations, codes of practice and the related requirements of the country of destination and all applicable local codes.

LOCATION

- The equipment must be installed on a smooth and level floor capable of supporting the weight of the fully laden appliance.
- To comply with NSF Sanitation Standards the unit must stand on casters for ease of mobility during cleaning procedures. Note: The appliance is shipped with casters installed. Some adjustments might be required to level the unit.
- The location MUST be free from and clear of combustible materials.
- The location must not be next to heat-generating (broiler, dishwashers, etc) equipment or in direct sunlight and must be protected from weather.
- Do not install the equipment directly over a drain. Steam rising up out of the drain will adversely affect operation, air circulation, and damage electrical / electronic components.
- Install the equipment away from direct exposure to air conditioning outlets. Cool air directed at the equipment could affect product temperatures.

VENTILATION

- VENTILATION REQUIREMENTS MAY BE SUBJECT TO LOCAL BUILDING AND FIRE CODES. CONSULT LOCAL AUTHORITIES HAVING JURISDICTION.
- This appliance must be vented properly to operate correctly and safely. Due to the extremely high temperature a fire safety system should be installed. In addition, frequent cleaning of the vent hood and the appliance greatly reduces any fire risk.
- Air movement should be checked during installation. There must be adequate air intake into the building to compensate for the amount of air removed by the ventilation system. Without a proper balance, abnormal atmospheric pressure will occur, affecting burner and appliance performance. If air movement is a concern, adjustments should be made to correct the problem by Factory authorized service technician.
- HAVING DIFFICULTY OPENING DOORS THAT EXIT THE BUILDING IS AN INDICATION THAT THE BUILDING HAS A PROBLEM WITH AIR MOVEMENT.
- Do not use fans to blow air directly at the appliance. This can create air cross-currents and/or excessive drafts that interfere with the operation of the unit.
- Do not obstruct the flow of ventilation air. Make sure the air vents of the equipment are not blocked

EXHAUST HOOD REQUIREMENTS

1. Install the equipment under an Exhaust Hood.
2. The exhaust hood must meet the following requirements:
   A. The exhaust hood must be sized for the cumulative ventilation requirements of all the appliances in the area under the hood.
   B. If an existing hood cannot be used, a new one must be constructed over the equipment.
   C. When determining hood size, include clearances.

NOTE: Always turn ON the exhaust hood when the unit is running to prevent condensation in the unit.

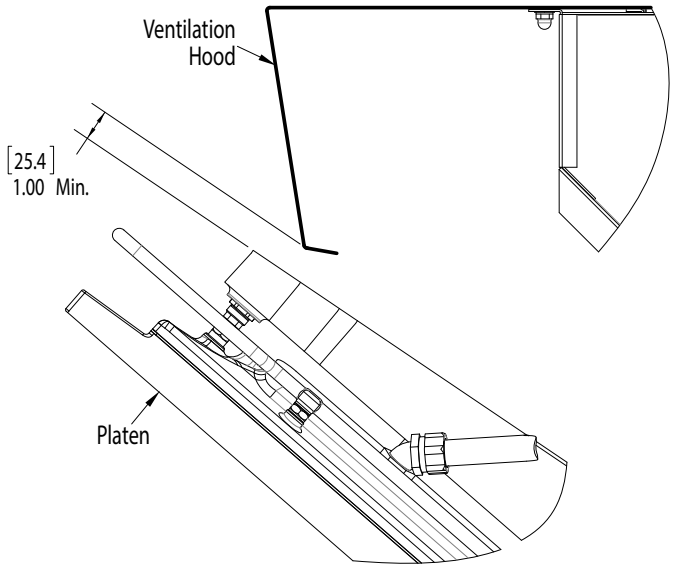

Clearance between Platen and Hood

Installation Instructions

TRANSPORTING EQUIPMENT TO LOCATION

- Plan first to lower your risk of encountering problems during the transport process.
- Understand the brake caster mechanism to apply or release when required.
- Keep top platen down during transportation.
- Match transportation speed to conditions.
- Turn downhill, not uphill, if stability becomes uncertain on slope or ramp.

⚠WARNING

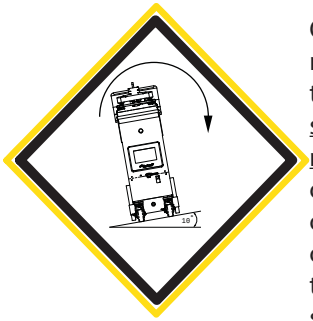

One (1) platen grills are narrow and most susceptible to tipping over. Extra care should be taken when moving the units, especially on slopes and ramps. Angle of 10º or more, the unit may overturn by itself. To reduce the tipping hazard the unit should be only moved with the platen down and accessories /extra weight removed from the top of the grill plate and platen. Furthermore, the cook height of the equipment should not be adjusted higher than is necessary for safe and ergonomic operation. Moving / pushing the unit sideways should not be done as this is the direction that the greatest tipping hazard exists.

⚠CAUTION

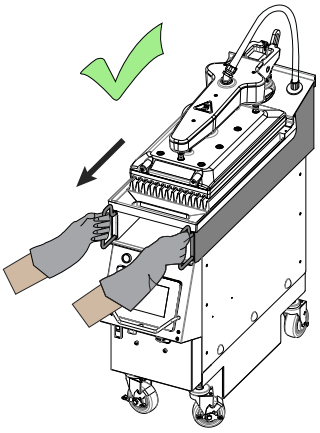

MOVE GRILL
USING THE SIDE HANDLES.

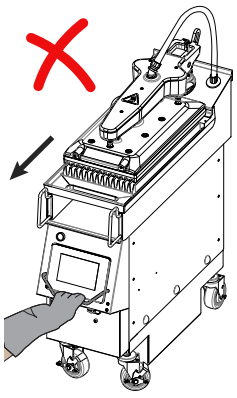

DO NOT MOVE GRILL
USING THE SCREEN GUARD.

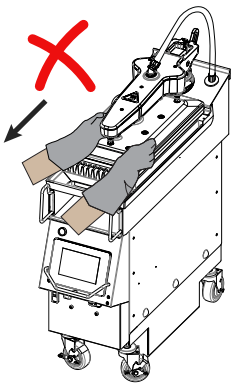

DO NOT MOVE GRILL
USING THE PLATEN OR ARM.

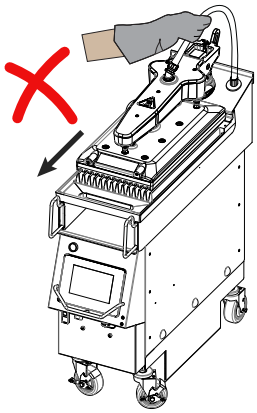

DO NOT MOVE GRILL
USING THE CONDUIT.

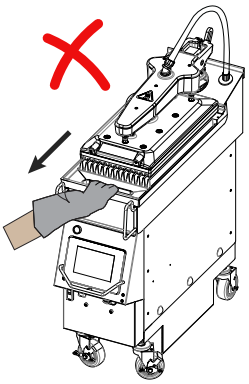

DO NOT MOVE GRILL
USING THE GRILL PLATE.

APPLIANCES EQUIPPED WITH CASTERS

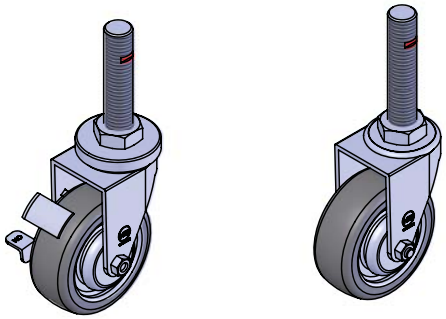

The appliance is shipped with casters installed. Some adjustment might be required to level the unit.

The front and rear casters are adjustable, only the front casters have brakes.

To restrict the mobility of the appliance, use current method of restraining per the requirement at location.

REMOVING DOCKING STATION

If location has a docking station for CXBE12 (or Grill 1.0/ Gen1), remove all the components of the docking station before installing the new grill.

New grill's back casters are further back on the unit than the current grill. If installed on the existing docking station, the back of the grill would be too close to the wall.

To remove the docking station:

1. Unplug and remove current grill from the docking station.
2. Lift up and remove the top cover.
3. Remove the bolts securing the bottom panel and then remove the bottom panel.
4. Ask the Store Manager to keep all docking station components in a safe place.

LEVELING

- Position and level the appliance under the hood and in its normal operational position.
- **IMPORTANT:**
  - **Ensure grill is level side to side.**
  - **The grill MUST slope to the front such that the back of the cook surface is ½" higher than the cook surface at the front to promote forward grease flow.**
  - **To achieve the desired slope, measure from floor to lower grill cook surface, 34" height at back and 33.5" height at front.**

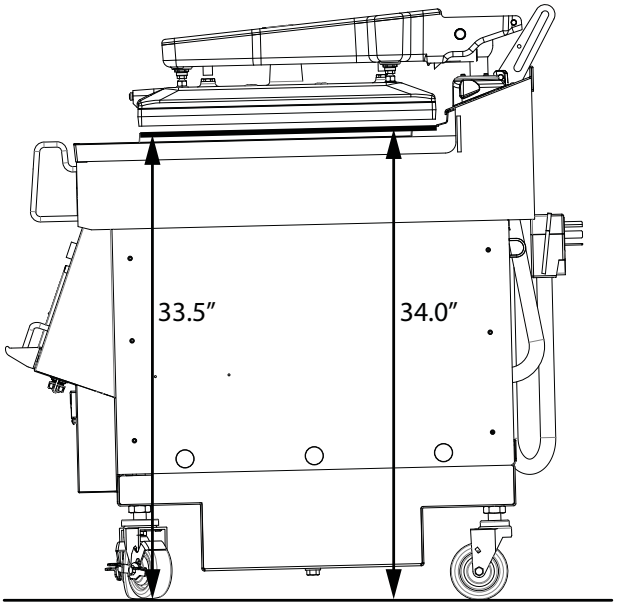

- Adjust the unit by turning the casters clockwise to raise the unit and counterclockwise to lower the unit.
- Ensure equipment will not tip or slide.

BACK CASTER ORIENTATION

Ensure that when at the final position, the back casters do not protrude beyond the back panel as shown below.

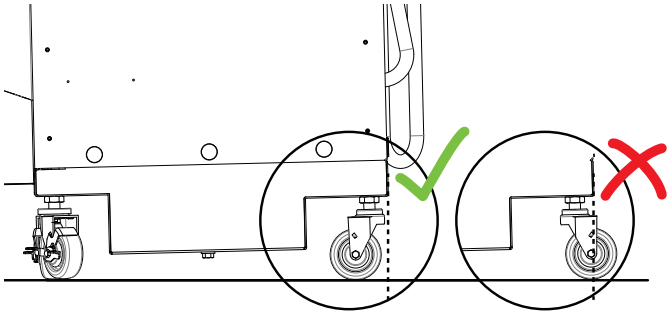

ADJUSTING THE CASTERS

NOTE:

- All casters are height adjustable.

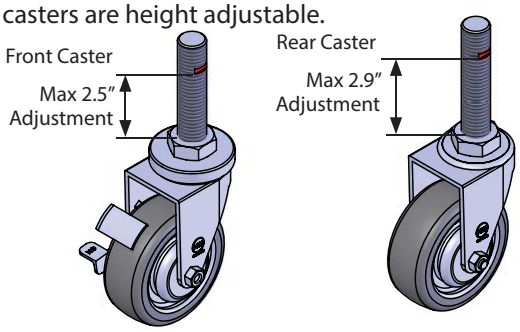

- There is NO swivel locking on the casters.
- Back casters do not swivel.

To Adjust the Height of Casters:

1. Ensure the Green Power Switch is OFF. (Green light is off.)

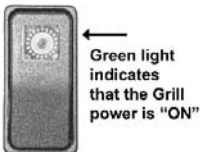

2. Use equipment to carefully raise the grill slightly so that the wheel is off the ground and no longer bearing unit weight.
3. Loosen caster jam nut by turning it counterclockwise with a wrench.

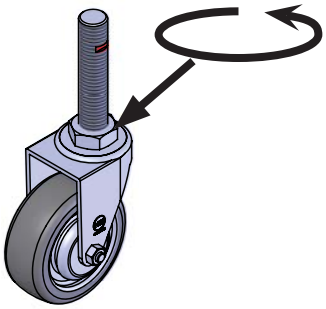

Important

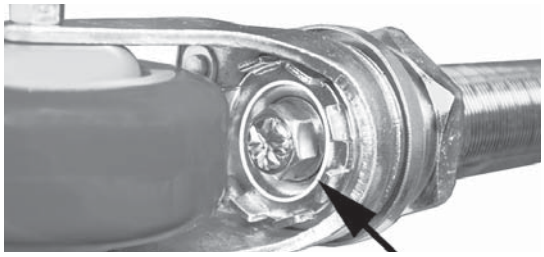

Each caster assembly has a nut (above, an example) on the underside to secure the swivel system. **NEVER loosen this nut.** This nut is intended for the caster swivel system only.

4. Adjust the caster assembly by turning the caster counterclockwise to increase the height or clockwise to decrease the height.

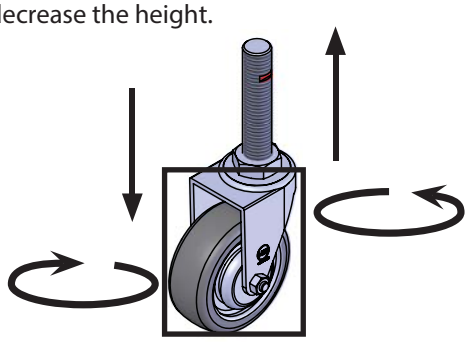

5. The RED MARK on the threaded stem indicates the maximum adjustment. These RED MARKS MUST NOT BE VISIBLE.

⚠Warning

Adjusting the height above the red mark could cause the caster to fail and the unit to tip over.

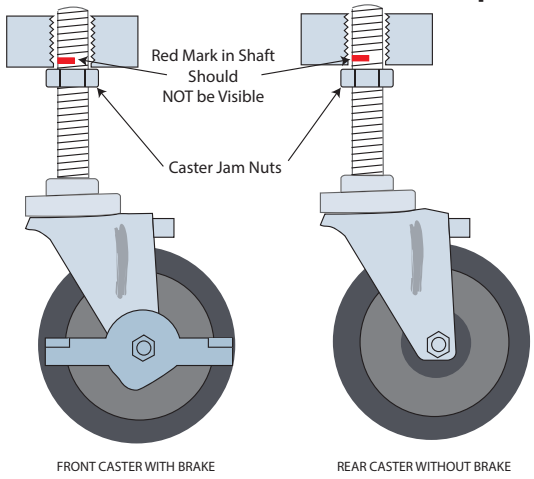

6. To secure the caster assembly, tighten the caster jam nut against the chassis.

REMOVING STAINLESS STEEL PLASTIC FILM COVER

All plastic protective film must be removed before turning on the appliance.

The film covers both internal and external components (e.g. side panels, grease shield).

1. Using a plastic scraper, wedge the film away from the stainless steel.
2. Grasp and pull the film very gently away from the stainless steel.

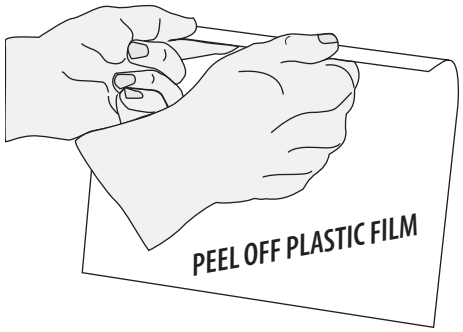

REMOVING THE "DESI PAK" BAGS (IF REQUIRED)

- Desi Pak are used to protect the electronic components by controlling humidity levels within the equipment.
- Desi Pak bags are only intended to be left inside the equipment during shipping and storage. .
- Keep these bags in the equipment while in storage or not in operation.

To remove the Desi Pak:

1. Turn the Green Power Main Switch OFF. (Green light is off.)

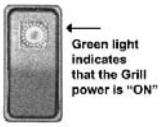

2. Remove the two Phillip screws located on each side of the front panel below the user interface. Store the screws in a save place.
3. Gently move the panel up slightly to dislodge from the hooks on each side.
4. Move the panel slowly away from the front. Watch and do not break the wires and connectors.
5. Remove the bags.
6. Reinstall cover and tighten the screws.

ELECTRICAL CONNECTION

⚠Warning

Authorized Service Representatives are obligated to follow industry standard safety procedures, including, but not limited to, local/national regulations for disconnection / lock out / tag out procedures for all utilities including electric, gas, water and steam.

⚠Warning

Disconnect power supply before starting this procedure.

- **IMPORTANT**

  The appliance must be electrically grounded in accordance with local codes, or in the absence of local codes, with the National Electrical Code ANSI/NFPA70, or the Canadian Electrical Code CSA C22.2, as applicable.
- The appliance is equipped with a standard NEMA 15-50P plug with the appropriate strain relief for your protection against shock hazard. The appliance should be plugged directly into a properly grounded three prong receptacle.
- **DO NOT** cut or remove the grounding prong from this plug.
- It is recommended to allow enough slack on the electrical cord to allow the appliance to be pulled out for proper regular cleaning and maintenance.
- **DO NOT** USE AN EXTENSION CORD TO CONNECT THIS UNIT TO A POWER SUPPLY.

Start-Up and Function Test

NOTE: The grill is not equipped with a circuit breaker.

- Follow the steps on the Start-Up Checklist.
- For service instructions, see service manual.
- To install accessories and attachments, see Section 3, Operation.

GARLAND A Welbilt Brand

START UP CHECKLIST (Grill Model CXPB12)

Chick-fil-A

Serial #:		Date:
CFA Store #:		Address:

ELECTRIC / 3 PHASE	INPUT SPECIFICATION: 208V	MEASURE VOLTAGE FROM OUTLET: L1-L2 L2-L3 L3-L1

1	Remove unit from package. Inspect for any obvious shipping damage. Shipping material under the platen will be removed later.	Done ☐
2	Remove side panel. Ensure line cord is secured to the contactor. Check that all pin connectors are secure.	Done ☐
3	Remove existing unit. Serial # of unit removed: NA ☐	
4	**Remove docking station** for CXBE12 (Gen1) Grill. Must be done before installing CXPB12 (Gen2) Grill. Docking Station Removed: Y ☐ NA ☐	
5	Place new grill in place under the hood and plug into existing outlet.	Done ☐
6	Does the Store have space and power for 2 grills? Space: Y ☐ N ☐ Outlet: Y ☐ N ☐	
7	Level grill side to side. Front to back: Measure from floor to lower grill cook surface, 33.5" height at front and 34" height at back (lower grill grate has a ½-inch slope to the front to promote forward grease flow). Adjust casters as required. Provide details if unable to achieve:	Done ☐
8	Ensure that when at the final installed position, the back casters do not protrude beyond the back panel.	Done ☐
9	Turn on grill. Record software version =	
10	Ensure control initiates. The platen raises and the HOME screen appears on display.	Done ☐
11	Remove all packaging materials underneath the platen.	Done ☐
12	Spray Kay Release Agent provided by location to both the upper and lower cook surfaces. Consult Supervisor onsite for Release Agent and Super Contact Cleaner for start-up.	Done ☐
13	If applicable, set up grill connection to Store's WiFi. Grill Connected to Store WiFi : Y ☐ N ☐	
14	Press PRESS&GO on HOME screen, and grill goes to preheat.	Done ☐
	RECORD VOLTAGE FROM CONTACTOR — L1-L2: L2-L3: L1-L3:	
15	Ensure grill pre-heats, reaches set points, soaks and that platen raises and the CFA recipes appear.	Done ☐

16 — Press the TEMPERATURE icon and fill in the following table:

ZONE	ACTUAL	SETTING	ZONE	ACTUAL	SETTING
Top Front			Bottom Rear		
Top Rear			Bottom Middle		
			Bottom Front		

17	Ensure customer confirms the Hood Height is practical. Adjust Hood Height as required.	Done ☐
18	Check gap and platen level. Perform gap calibration if required. If perform calibration, ensure that the jam nuts are tightened. Record CURRENT PLATEN POSITION = mils	Done ☐

19 — From SETTINGS screen, scroll to AUTO LEVEL SETTINGS. **RECORD THE NUMBERS SHOWN ON SCREEN. NO ACTION IS REQUIRED.**

PLMIN = MILS		
PLMAX = MILS		
ZB = MILS	ZF =	ZDBF = MILS

20	Ensure that the front deflector and side skirts are installed and that the store understands their function and knows of their importance for proper cooking performance.	Done ☐
21	Run the grill without product on the grill and confirm normal functioning of the following:	
	SLEEP MODE works?	Y ☐ N ☐
	Round green push button starts, cancels and acknowledges cook cycle.	Y ☐ N ☐
	Speaker works? Confirm volume level with store operator and adjust as required.	Y ☐ N ☐
22	Ensure all panels are tightly secured and attach all accessories provided.	Done ☐

23 — Obtain assistance from store personnel to perform **product integrity test** on chicken, full load (target 175F to 185F, min allowed 165F, max 205F). Record temperatures:

RIGHT SIDE (°F) (from front to back)	1	3	5	7	9	
LEFT SIDE (°F) (from front to back)	2	4	6	8	10	

24	Problems / Special Circumstances / Damage:	

Note: See Installation/Operation or Service Manual for detailed instructions on grill control functionality.

SUBMITTED BY:	ACCEPTED BY MANAGER:
Name: Signature / Print name	Name: Signature / Print name
SERVICE AGENCY:	I have been adequately informed on the operation of the grill, its use and general operation? Y ☐ N ☐
SUB-AGENT(if applicable):	I have been adequately informed on the maintenance of the grill? Y ☐ N ☐
Have you trained the store on the operation of the grill? (30 minutes) Y ☐ N ☐	Have received the following **ADDITIONAL** accessories and parts:
Are you a factory certified technician Y ☐ N ☐	☐ Plastic Oil Pan (4602732)
Date of certification:	☐ Side Skirt, LHS (4602835)
	☐ Side Skirt, RHS (4602836)
	☐ Front Smoke Shield (4603071)
	☐ Nugget Spatula (4602894)
	NOTE: Store is responsible to store the above parts in a safe place for future maintenance and replacement.

SAMPLE

Part# G_EB_FC_CFABROILER_CXPB12-StartUp

Section 3
Operation

⚠WARNING

Power Interruption

If for any reason the electrical power is interrupted or the circuit breaker is turned off, turn the power off to the appliance by switching the main power switch off. If there is possible equipment issue, contact a factory authorized service representative before attempting to restore the power.

⚠WARNING

High Temperature

To avoid burn injuries, handle the grease drawer and the contents carefully. Use Personal Protective Equipment (PPE).

ALL exterior components and attachments can get very hot during or after operation. Handle with care and use PPE.

With two sided cooking, the area between the upper and lower grill grates should be regarded as a DANGER ZONE. During two sided cooking the operator must not be within this danger zone.

⚠ CAUTION

ALL Shields MUST BE IN PLACE CORRECTLY before operating the appliance. This includes ❶ Left Side Skirt, ❷ Right Side Skirt and ❸ Front Deflector Shield.

Before operating this appliance, the ❹ grease drawer MUST be in place and sit completely inside the drawer compartment.

When grease starts seeping through the overflow hole of the drawer, operator MUST empty the grease drawer.

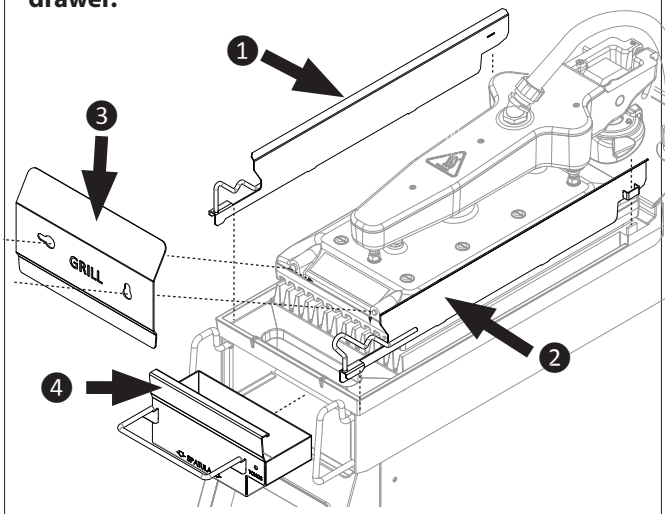

⚠CAUTION

To achieve proper cooking temperature and performance, the Left and Right Side Skirts MUST BE INSTALLED correctly before operation.

Proper Installation of Side Skirts:

- The top of side skirt bends outwards!
- The skirts sit along the inside edge of the lower grate.

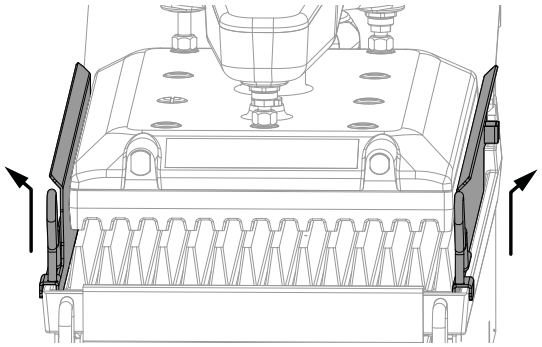

- The skirts must sit horizontally and firmly on the lower grill grate.
- If skirt doesn't fit, ensure you have the correct skirt for the correct side, and the lower grate surface where the skirt sits is clear of any obstructions or debris.
- RIGHT Side is shown below:

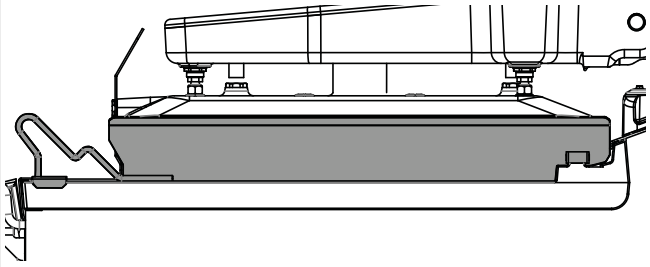

- LEFT Side is shown below:

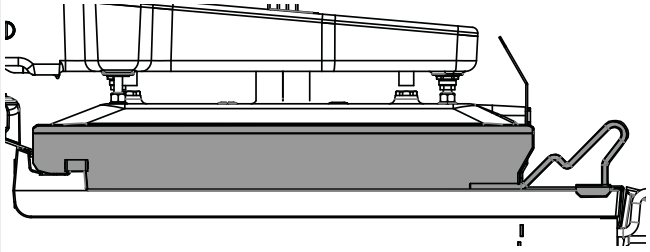

⚠WARNING

Pinch Hazard

When the grill is on, do not touch or put hand near the platen lift system at the back of the grill.

⚠WARNING

Electrical Hazard

- **DO NOT** use an extension cord to connect this appliance to a power supply.
- **DO NOT** use this appliance if the power cord is damaged.
- **DO NOT** attempt to repair a damaged power cord.
- **DO NOT** expose the power cord to heat and be careful not to damage the cord by pinching or rubbing on sharp edges.
- **DO NOT** attempt to service this appliance unless you are a factory authorized service technician.
- This appliance is intended for commercial use only and should only be operated only by fully trained and qualified personnel.
- **DO NOT** operate the appliance unless all panels and covers are installed.

⚠CAUTION

Property Damage

- **DO NOT** sit or stand on the appliance under any circumstance. Serious injury and damage to the operator, appliance and/or property could result.
- Ensure that the unit is cleaned daily per the most current schedule and instructions given by Chick-fil-A. Clean cooking surfaces are imperative for proper operation.
- Use only the accessories and tools supplied for this equipment to scrape off heavy deposits or oil.
- **DO NOT** use generic steel scrapers or knives, as iron particles may become embedded and rust.
- **NEVER USE STEEL WOOL**.
- **DO NOT** cool off a hot broiler with ice. The use of ice may damage the castings, crack the welds, or warp the broiler grate castings which will void the warranty.
- **DO NOT** lift, push, or drop the platen manually over the normal open position. Otherwise, this will cause premature failure of the electrical flex steel conduit and the lifting mechanism.

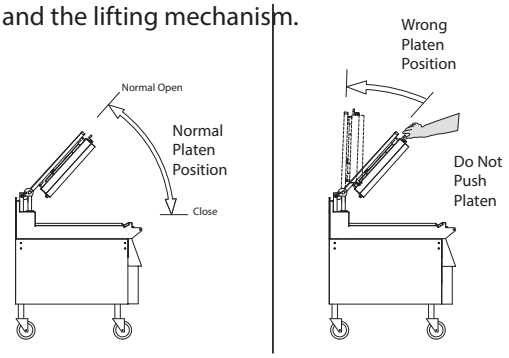

Controls

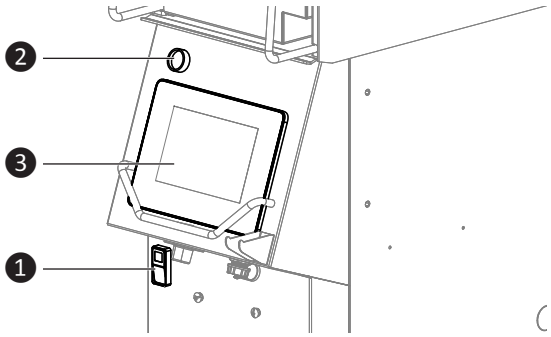

❶ POWER ON / OFF SWITCH

- Power Switch turns the appliance ON (green light on)or OFF (green light off).
- NOTE:
  - For extended shut down or idle periods, turn the main power switch "OFF" "0" position, and unplug the electrical power cord.

❷ ROUND GREEN PUSH BUTTON—COOK START/ ABORT

- Press round button to start cook cycle.
- Press and Hold to abort a cook cycle.
- Press to raise or to lower the platen.

❸ easyTOUCH CONTROL

- Computer program to cook, control and monitor the functions of the appliance. See section: easyTOUCH Controller.

⚠CAUTION

Touch Sensitive Control Interface

The controller is sensitive to touch. Do not use utensils or cooking tools to navigate the menu screen.

DO NOT HIT THE SCREEN.

If the glass is crack or broken, STOP and TURN OFF the appliance immediately. DO NOT touch any part of the screen or inside the control. Contact a Factory Authorized Agency immediately.

Sequence of Operation

1. After pressing the power switch ON (left illustration, ❶, green light on), the controller (❸) is started and the grill will go through initialization.
2. While grill goes through a calibration process, the platen (or lid) may rise and lower.
3. Grill platen (lid) will rise to open position after initialization.
4. The HOME screen will appear on the display screen ❸.

5. When user touches Press&Go icon, the upper platen is lowered automatically.
6. Upon completion of the cook cycle and after preheating, the upper platen is raised automatically.

NOTE that the upper platen remains in the lowered position by nature of its own weight. It is not locked down. **Under no circumstances, other than safety, should the platen be manually opened.**

Accessories and Attachments

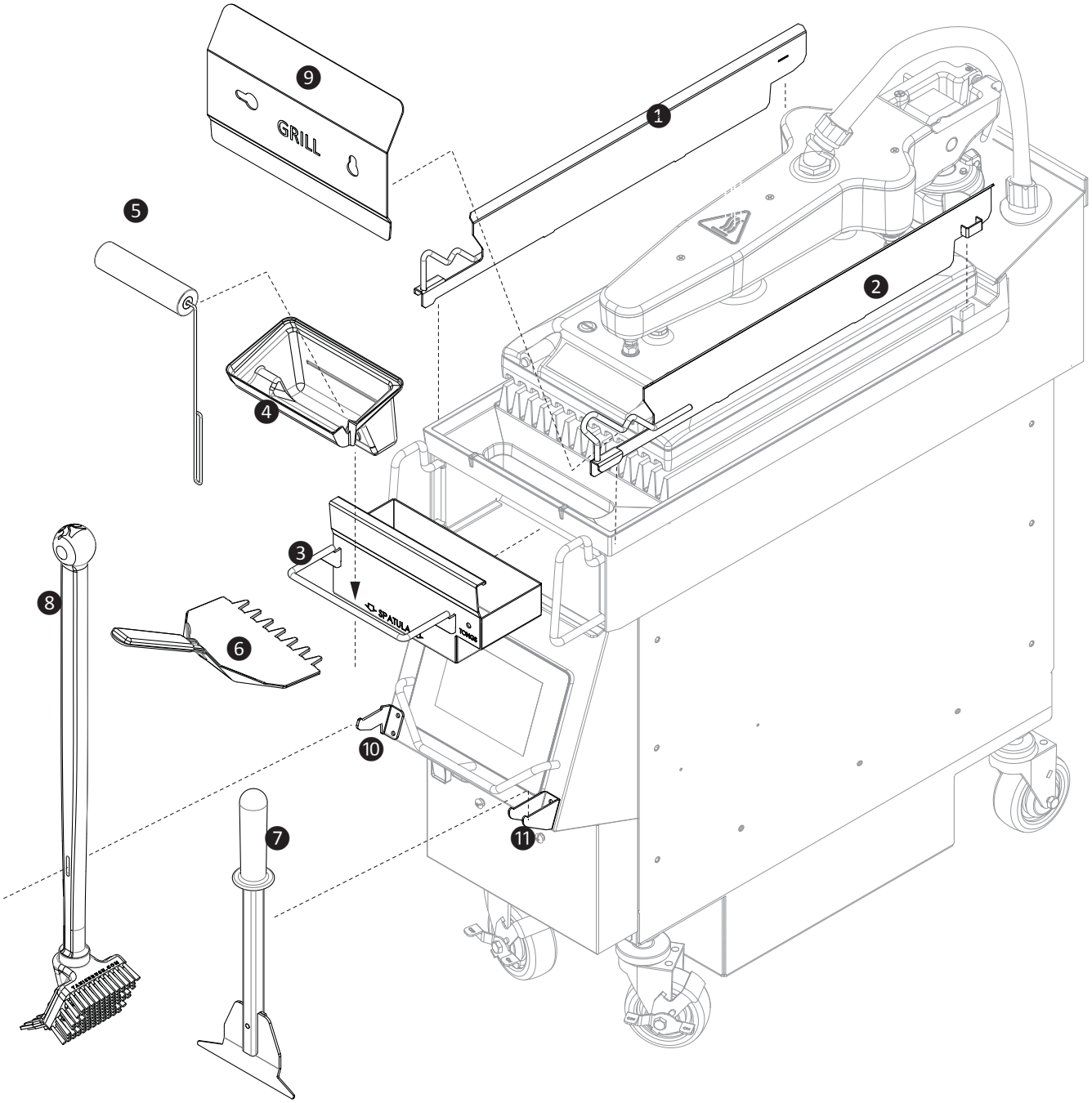

1. Side Skirt LEFT
2. Side Skirt Right
3. Grease Drawer
4. Oil Pan
5. Oil Roller Handle and Oil Roller
6. Nugget Spatula
7. Detailing Tool
8. Grill Brush / Squeegee
9. Front Deflector Shield
10. Holder, Grill Brush
11. Holder, Detailing Tool

INSTALLING AND USING THE ACCESSORIES

Side Skirts

The side skirts help to regulate grill temperature.

⚠CAUTION

To achieve proper cooking temperature and performance, the Left and Right Side Skirts MUST BE INSTALLED correctly before operation.

Proper Installation of Side Skirts:

- The top of side skirt bends outwards!
- The skirts sit along the inside edge of the lower grate.

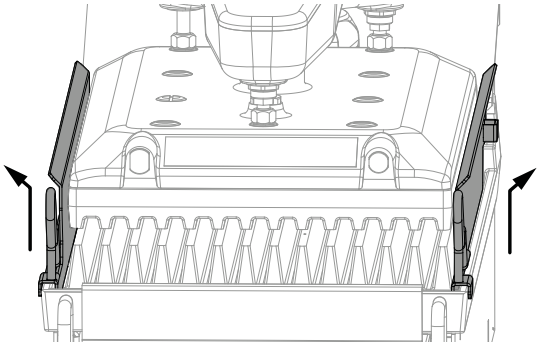

- The skirts must sit flat on the lower grill grate.
- RIGHT Side is shown below:

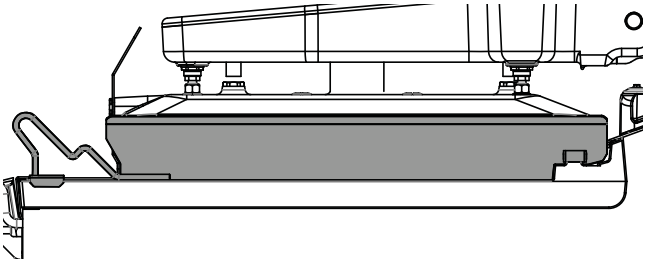

- LEFT Side is shown below:

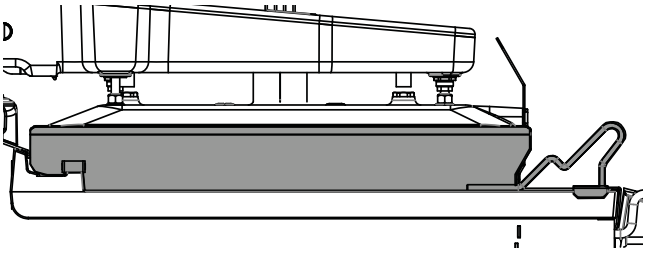

Front Deflector Shield

⚠CAUTION

The front deflector shield deflects smoke away from the front and helps to regulate grill temperature. The deflector MUST be fastened securely in place before operating the appliance.

To install:

1.

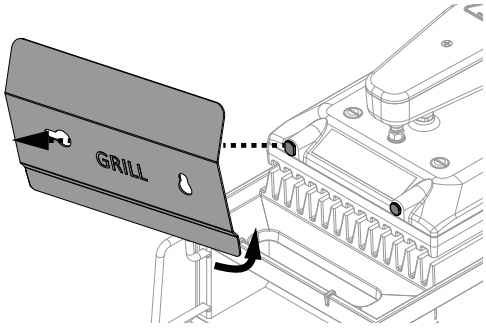

2.

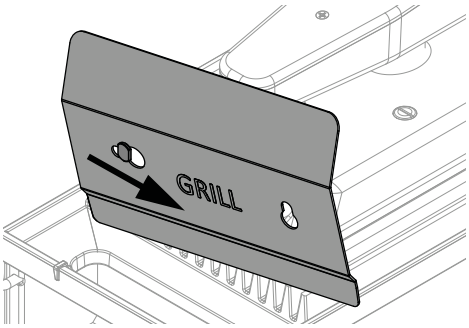

3.

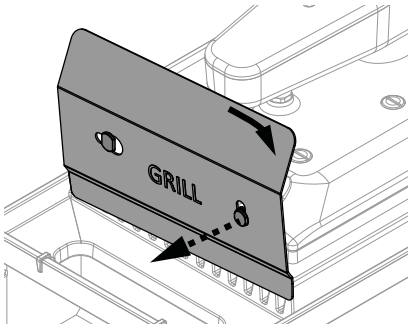

4.

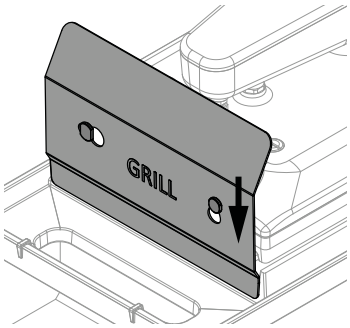

Grease Drawer

⚠CAUTION

Before operating this appliance, the grease drawer MUST be in place and sit completely inside the drawer compartment.

When grease starts seeping through the overflow hole on the drawer, operator MUST empty the grease drawer.

Store tongs and nugget spatula under the grease drawer.

Oil Pan

The plastic oil pan has been redesigned and upgraded. A stainless steel container for the plastic oil pan is no longer required. The oil pan can be hung directly onto the rail in front of the grease drawer.

NOTE: Do not fill Canola oil above the fill line!

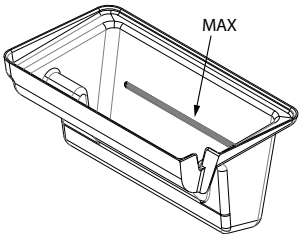

Nugget Spatula

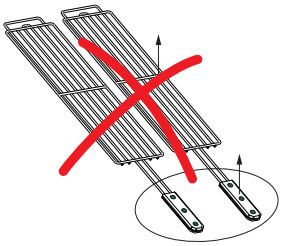

Nugget Racks are no longer required. Nuggets are to be placed directly onto the cook surface.

After the cook cycle, use the nugget spatula to remove chicken nuggets.

Kanban tray can be placed directly onto the front profile of the side skirts.

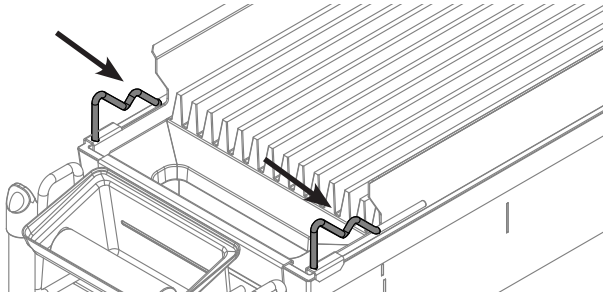

Operator can then use the nugget spatula (❻) to rack the nuggets into the food tray.

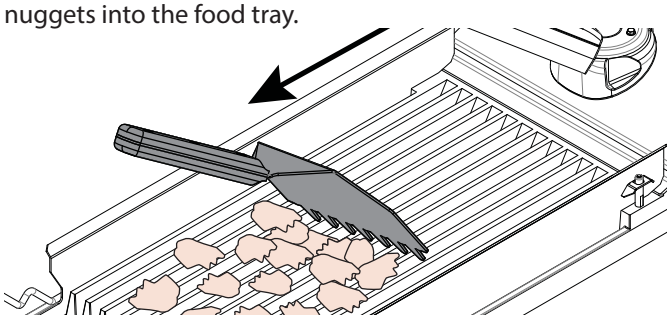

Cooking Procedure

- The comprehensive cooking procedure on the Garland Grill, together with proper food preparation and handling methods, has been developed by Chick-fil-A for the most efficient and seamless process. Only authorized personnel is given access to the details on the CFA website. Website is password protected.
- This section provides only the highlights of the cooking process on a Garland Backyard Grill.
- For stepwise instructions on using the controller, refer to section "easyTOUCH Controller".

SLEEP MODE AND WARNING

A sleep mode is automatically triggered if the grill has been idle for 5 minutes after previous cook cycle.

⚠CAUTION

If the broiler sounds a warning tone that it will about to go into sleep mode, step back from broiler immediately to avoid risk of burn injury when broiler lid closes. Ask Boards person to reject or cancel the broiler's request to go into sleep mode.

To bring grill out of Sleep Mode, push the round green button or WAKE on screen. The platen will raise and the Recipe Selector screen appears.

PREPARING GRILL FOR USE & RELEASE AGENT

(Before the first operation of the day)

1. To verify that:
   - Grill plates are free of residues.
   - The front deflector shield, two side skirts and grease drawer are installed properly on grill.
   - Other tools and attachments can be assembled during pre-heat.
2. Turn grill power switch on (green light on).

3. Wait for the control software to boot up. The platen will rise and the HOME screen appears (shown below).

4. Spray release agent thinly and evenly on the lower, and then the upper grill plate, 4 to 6 squirts each. Do not wipe grates.

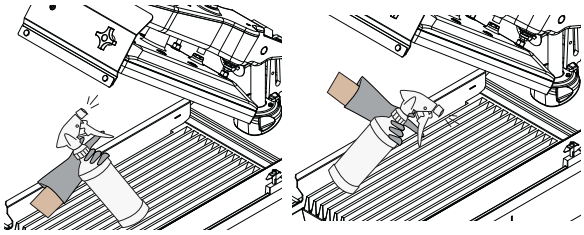

Important

Do not spray release agent onto hot grill plates. Always apply release agent prior to pre-heating grill. Release agent must heat with grill to set.

5. Press Press&Go icon to pre-heat grill. Platen will close.
6. When grill is heated to the set temperature, the platen will rise and the Recipe Selector screen appears.

PUTTING PRODUCTS ON GRILL

1. (if required) Bring grill out of Sleep Mode, push the round green button or WAKE on screen. The platen will rise and the Recipe Selector screen appears.
2. Verify that:
   - Grill plates are free of residues.
   - The front smoke deflector, two side skirts, grease drawer and other attachments are installed properly on grill.
   - Canola oil has been applied using the oil roller to both upper and lower grill grates.
3. PRESS THE CORRECT RECIPE ICON on the Recipe Selector screen.
   DO NOT PRESS START; PRESS START AFTER products are put on the grill.

4. If the broiler is at the wrong temperature for the recipe selected, a TOO HOT or TOO COOL warning will appear. **WAIT for the broiler to reach temperature.**

TOO HOT TO COOK!

TOO COLD TO COOK!

5. Lay products per CFA procedure. A summary of lay pattern is provided in Table: CFA Product Lay Pattern (page 27).
6. Press the round green push button or START button on display to cook. Platen will come down.

ABORTING A COOK CYCLE

30 Seconds Rule

- If wrong recipe is selected, it can be changed within first 30 seconds of cook cycle without removing the products.
- **Products MUST BE DISCARDED if cook cycle is aborted after more than 30 seconds into cooking.**
- A cook cycle can be canceled by pressing the ABORT icon or the round green push bottom. The platen will rise and the DISCARD PRODUCT screen appears:

To change recipe within first 30sec of cook cycle:

1. Press ABORT icon on the countdown screen or press and hold green push button for 3 seconds.

2. Press green checkmark on the DISCARD PRODUCT screen or press and hold green push button for 3 seconds..

3. The Recipe Selector screen appears and press the correct recipe. Then press START.

ADDING ADDITIONAL COOK TIME

After a cook cycle has ended, the platen will rise and the Recipe Selector screen appears (shown below).

If the cooked product fails the CFA standard (color doesn't match the color requirements or the product internal temperature is below 165 deg F), there is an option to cook the batch for an additional 45 seconds, by pressing the (+45sec) icon. The platen will close and the product will cook for the additional time.

TABLE: CFA PRODUCT LAY PATTERN SUMMARY

For reference only. Always follow the latest instructions from Chick-fil-A.

Grilled Filets

- Place filets smooth side down to create the best grill marks. Point tips of filets to outside of grill.
- Ensure filets do not touch one another and do not overlap outer edges of grill grates.

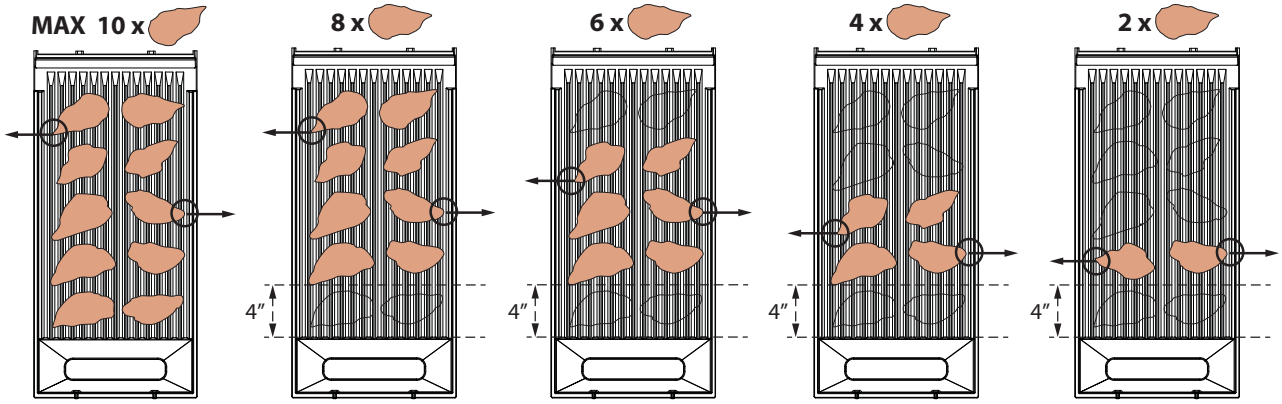

Nuggets

- **NOTE: Nugget racks are no longer required. Nuggets are to be placed directly onto the cook surface.**
- Spread nuggets evenly and ensure they do not touch. Otherwise they will not cook properly.
- Make sure nuggets are placed at least 0.5″ from edge of grill grate.

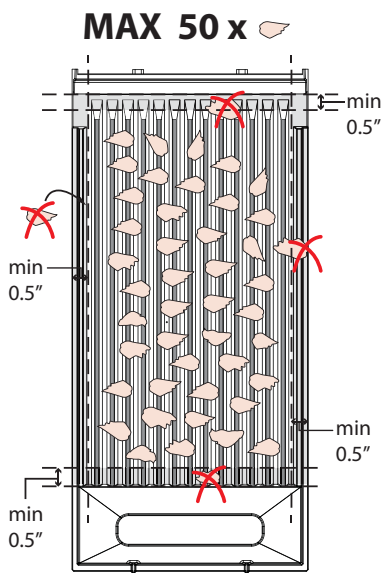

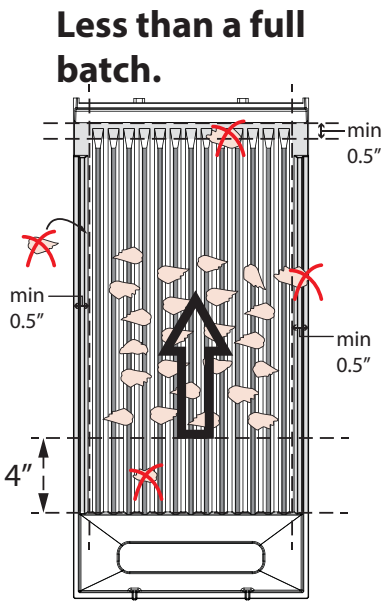

Sausages

- Position patties centered on left / right half of grill grate.
- Ensure they do not touch.

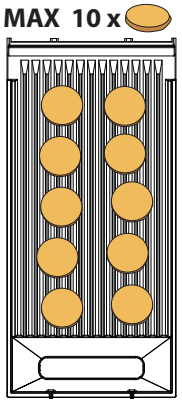

Bacon

- Spread bacon strips evenly along the center of grill grate.
- Ensure they do not touch.

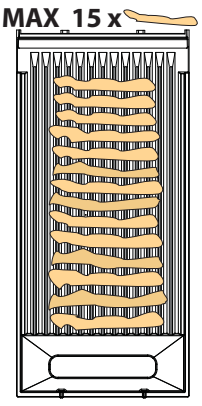

easyTOUCH™ Quick Reference

HOME SCREEN

- Display Temp Status
- Enter Clean Mode
- Set Display Language
- Lock Screen

RECIPE SELECTOR SCREEN (Display all recipes from chosen menu.)

- Change Cook Time / Gap
- Go To HOME Screen
- Enter Sleep Mode

Press &Go → Preheat and Launch CFA Menu →

MENUS → Password Screen →

To edit or delete or add a menu to the library. A menu is a collection of recipes.

ALL RECIPES → Password Screen →

To edit or delete or add a recipe to the library. A recipe consists of cook settings (time, temp, gap etc).

SETTINGS → Password Screen →

- FACTORY
  - PASSWORD (for Manager password)
  - IMPORT/EXPORT (FROM USB)
    - Import Recipes from USB
    - Export Recipes to USB
    - Export System Logs to USB
  - SOFTWARE UPDATE
- CALIBRATION
  - THERMOCOUPLE CALIBRATION
  - PLATEN CALIBRATION
    - Capture Data
    - Perform Calibration
    - Data
- SETTINGS
  - LANGUAGE
  - SLEEP CONFIGURATION
  - VOLUME
  - USER INTERFACE
    - Start Button (Visible/Invisible)
    - Acknowledgement Control (Visible/Invisible)
  - SOFT RESET
    - Reset Lane

DIAGNOSTICS →

- REVISION →
  - MANUFACTURE DATE
  - INSTALL DATE
  - SERIAL NUMBER
  - UI HARDWARE VERSION
  - GUI KERNEL VERSION
  - UI SOFTWARE VERSION
  - CONTROLLER HARDWARE VER
  - CONTROLLER SOFTWARE VER
  - CLA KERNEL VERSION
  - SSRB HARDWARE VERSION
- DIAGNOSTIC LOG (Log shows error codes with time-stamps.)
- STATUS (Status displays info such as power line frequency, input power, motor status, etc.)
- STATISTICS →
  - STATISTICS VERSION
  - TOTAL COOK CYCLES
  - COOK CYCLES SINCE CLEANING
  - LAST CLEANED
  - TOTAL SERVICES
  - HOURS USED
  - PARTIAL COOK CYCLES
  - TOTAL PLATEN CYCLES
  - LAST SERVICE
- PLATEN CALIBRATION STATISTICS
- LANGUAGE CHARACTER MAP (Map lists all characters available for the factory-installed languages.)
- ADVANCED →
  - COMPONENT LIFE TRACKING
  - TEMPERATURE DIAGNOSTICS *(disabled)*
  - MOTION DIAGNOSTICS *(disabled)*

easyTOUCH™ Controller

NOTE: The easyTOUCH™ screen display, layout and icons shown herein are for reference only and are not intended to be an exact representation of those displayed on the grill.

FREQUENTLY USED SCREENS

Home Screen

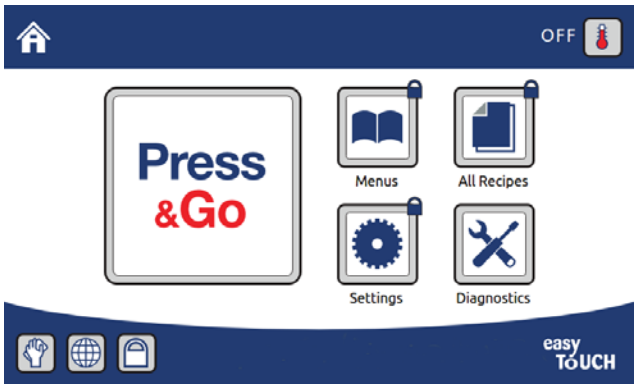

Recipe Selector Screen

ICONS & FUNCTIONS

Many of the icons described below are common on other cooking and settings screens.

PRESS & GO – is used to initiate preheat and soak on the grill.

MENUS – is used to activate, add, edit and delete Menus from the library. New menu images can be imported. A Menu is a collection of cook recipes. Password protected.

RECIPES – is used to add, edit and delete Recipes from the library. New recipe images can be imported. A Recipe consists of the cooking times, temperatures and platen gap for preparing a food item. Password protected.

SETTINGS – is used to change certain settings, such as date, time and volume. Password protected.

DIAGNOSTICS – allows access to the diagnostics screens, error log, and status of electronic components.

TEMPERATURE – is used to view the temperature settings and actual temperature in each zone.

CLEAN MODE – is used to put the grill into Clean mode, and heat or cool the grill to the required temp. When the grill is set to enforce the cleaning schedule, using the Clean mode resets the cleaning counter.

LOCK – is used to temporarily lock the touch screen for fifteen (15) seconds. This prevents buttons being pressed accidentally when wiping the screen.

LANGUAGE – is used to change the language of on-screen text/prompts. Available languages are pre-loaded at factory.

HOME – returns to the Home screen, the launching point for cook settings and programming modes. **When the home screen is showing, the heaters are OFF**

SLEEP – is used to enter Sleep mode. In Sleep mode, the grill maintains temperature and the platen lowers to conserve energy during periods of inactivity.

ON SCREEN WARNINGS AND ALERTS MESSAGES

The following warnings might appear after a recipe is selected.

TOO COLD TO COOK WARNING

- Indicates the grill temperature is too cool to properly cook a recipe.
- The grill will not allow the cook cycle to start until it has heated to the minimum required starting temperature.

TOO HOT TO COOK WARNING

- Indicates the grill is too hot.
- A cook cycle cannot start until the grill cools to the required starting temperature.

In either case, another recipe can be selected. If the grill is at the right temperature to cook the newly selected recipe, the message disappears and cooking can start immediately.

OPERATIONS OVERVIEW

The grill operates in three modes:

- **Press & Go** mode to preheat and to cook.
- **Sleep** mode to conserve energy.
- **Clean** mode to attain temperature for cleaning and reset cleaning counter.

Press & Go Mode

-

Access from HOME screen.

- **Press & Go mode** initiates PREHEAT. When preheat completes, the menu screen will appear.
- **Menus and Recipes:**

  Multiple menus can be set up, each using different set points and containing different or shared recipes. The recipes stored by the grill contain the cooking profiles (times, temperatures, prompts and platen gap) for various products. Menus and recipes can be added, edited and deleted from the library. Cook time and/or platen gap may be changed for each recipe, depending on the grill set up.

Sleep Mode

-
Access from cooking screens.

- **Sleep mode** lowers the platen to conserve energy during periods of inactivity, keeping it ready to start a cook cycle.
- When in Sleep mode, the grill will maintain the current temperatures.
- **Automatic Sleep Mode:** The grill can be configured to enter Sleep mode automatically after a period of inactivity.

Clean Mode

-
Access from HOME or Recipe Selector screens

- **Clean mode** brings the grill to the appropriate temperature for cleaning. It also resets the cleaning counter.
- If a cleaning temperature has been set, Clean mode will bring the grill to the set temperature prior to starting the cycle. A cleaning temperature may be specified if required by the chemicals used for cleaning.
- Putting the grill into Clean mode before cleaning the grill updates the "Last cleaned" date and resets the cleaning reminder prompts, if these are enabled.

easyTOUCH™ Procedures

START UP & PREHEAT

1. Press the **Power Switch** to turn the grill on.

2. easyTOUCH™ boots up and the display shows briefly the software version.

3. **WAIT** for the platen to complete its homing sequence (broiler beeps).

4. AFTER the platen stop moving, press **Press&Go** on the Home screen.

5. Platen moves down and the screen will show the MENUS screen briefly.

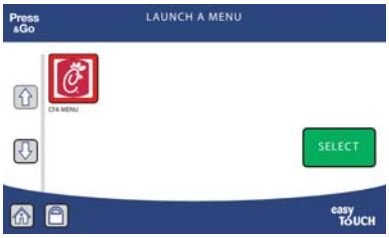

6. Once the platen moves to a horizontal position, PREHEAT starts using the set temperatures. The preheat progress is displayed.

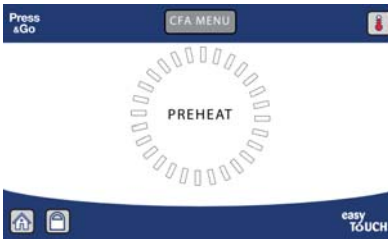

NOTE:

<u>To cancel</u> PREHEAT, press to return to HOME screen.

Following preheat the grill enters a soak period, allowing the temperature to stabilize throughout the upper and lower grates.

7. The grill is ready to use when the platen opens and the Recipe Selector screen is displayed.

COOKING A RECIPE

1. If the grill has entered Sleep mode, press WAKE to raise the platen.

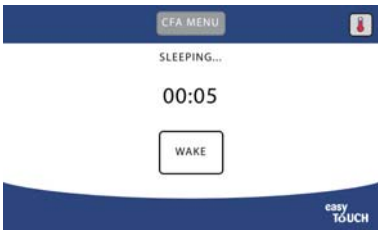

2. Press the desired recipe icon.

3. If the grill is at the wrong temperature for the item selected, a TOO HOT or TOO COOL warning will appear.

Wait for the broiler to reach temperature or select a different recipe.

4. Lay product on the grates using the appropriate placement guidelines.

5. Press the round green push button or the START button on display to close the platen and to start the cook cycle.

6. A progress ring and countdown timer appear.

Note: Press ABORT (X) or the round green button during cooking stops the cook cycle, raises the platen, and displays a warning "DISCARD PRODUCT".

7. When the cook cycle has finished, a DONE message is displayed, usually with an audible alarm. Remove the product and press the green check mark or press the green button to acknowledge the DONE message.

Note: If the wrong recipe was selected, change the recipe by pressing X to stop the cook cycle. Then acknowledge the warning. Select the correct recipe and press START or the GREEN push button. **Changes should be made within thirty (30) seconds to avoid overcooking the product.**

After a cook cycle has ended, there is an option for cooking the batch for an additional 45 seconds. If required, press the **+45sec** icon. The platen will close and the product will cook for the additional time.

CHECK TEMPERATURES

The temperature screen shows the actual and the set point temperatures at each thermocouple.

Notice

Actual temperature of each heater changes as grill heats up or cools down. Once stabilized, actual temperatures should be within +/- 20 °F of set points.

1. To display the temperature screen, press the icon in the top right corner when cooking, cleaning, preheating, or on Home Page.

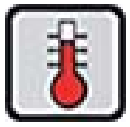

2. Press the Back Arrow or the Check Mark to return to the previous screen.

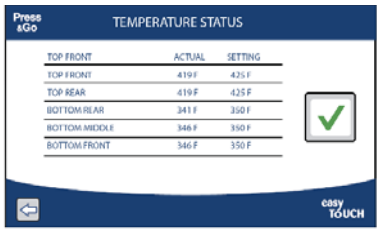

CANCELING A COOK CYCLE

1. Canceling a cook cycle raises the platen, and displays a DISCARD PRODUCT message. Press the check mark to clear the message.

Note: If the wrong recipe was selected, change the recipe by pressing X to stop the cook cycle. Then acknowledge the warning. Select the correct recipe and press START or the GREEN push button. **Changes should be made within thirty (30) seconds to avoid overcooking the product.**

ACTIVATE SLEEP MODE MANUALLY

Sleep mode can be selected from the RECIPE SELECTOR screen to save energy during idle periods.

1. From the RECIPE SELECTOR screen, press .

2. Press to continue or to cancel.

3. Top platen will close. Make sure no utensils are on the grill.

4. Display will show sleep time. Press WAKE to cancel Sleep Mode and to start the broiler.

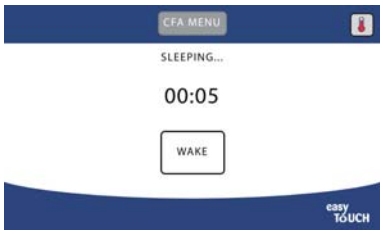

SHUTDOWN

1. Return to HOME screen. Pressing HOME icon exits cooking mode and turns off the heaters.

2. Press the power switch to turn off the grill. Green light is OFF.

CLEANING REMINDERS

If a cleaning schedule has been set up, a message will appear on the screen when cleaning is required based on the number of cook cycles:

Select if the grill will be cleaned immediately, or to continue cooking.

NOTE: If the grill is set to enforce cleaning schedule and the cleaning reminder has been bypassed too many times, easyTOUCH™ will display the CLEANING REQUIRED screen to enforce cleaning.

easyTOUCH™ All Recipes (password protected)

Notice

Recipe settings can be adjusted in ALL RECIPES (password protected). Consult Chick-fil-A corporate if editing is required.

EDITING A RECIPE

All contents of a recipe can be modified, including:

- Recipe Name
- Image or Icon for the recipe
- All cook settings in the recipe such as time, temperature, gap.

NOTE New Feature PARTIAL LOAD SETTINGS:

- Unless instructed by CFA or Garland engineering, do not change the defaults on Partial Load Settings.
- Function: To adjust time and temperature automatically when cooking a partial load. However, the delta temperature and time parameters have to be carefully tested. Consult CFA corporate if editing is required.

To edit a recipe:

1. Select ALL RECIPES from HOME screen.

2. Enter the password and press RETURN.

3. On the ALL RECIPES screen, press the recipe you want to edit. Then press the pencil icon at top right corner.

4. Edit name, cooking method if required.

5. Unless instructed by CFA or Garland engineering, do not change the defaults on Partial Load Settings. Press check mark to go to next screen.

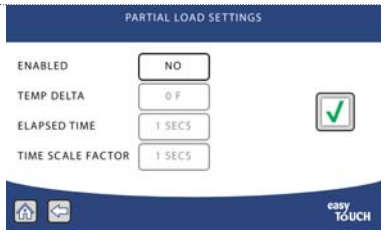

6. On the image selection screen, a new icon or image can be uploaded from USB.

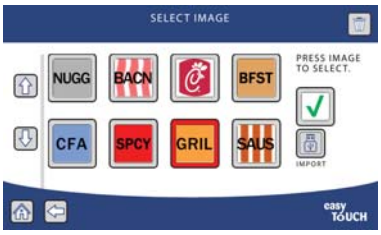

7. On the next screen, scroll to select the cook setting to edit.

8. Note:

PROMPT SELECTION	Select which prompt to display at the end of the cook step, or None. Press the button to toggle through the available prompt options.
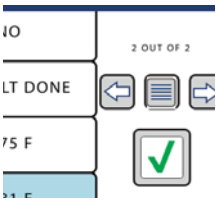	Pressing the right arrow to add another step to the recipe. Press list icon to view list of steps in the recipe.

easyTOUCH™ Settings (password protected)

Notice

Software Update and Thermocouple Calibration functions are available to Store Managers. However, these procedures should not be performed under normal operation.

Note that the software version and thermocouple offsets are configured and verified at Factory.

If for any reason grill is not performing as normal, immediately contact Garland CFA Hot-Line for assistance.

ENTERING PASSWORD IN OTHER LANGUAGES

The default password screen keyboard shows English character set.

To choose a different language, press the LANGUAGE key on screen to toggle to different language keyboards.

THERMOCOUPLE CALIBRATION

Platen will need to be preheated before calibration. Thermocouple settings are configured and verified at factory. If for any reason grill is not performing as normal, immediately contact Garland CFA Hot-Line for assistance.

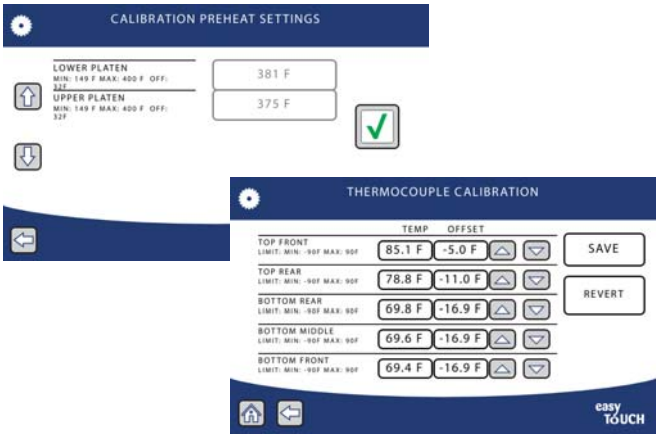

LANGUAGE

Use this setting to select a different language on the display.

Languages available: English, Spanish, French, German, Finnish, Portuguese, Russian, Swedish, Polish, Greek, Japanese, Korean, Chinese Simplified, Chinese Traditional.

1. Select SETTINGS from HOME screen.

2. Enter the password and press RETURN.

3. Use down arrow to scroll to LANGUAGE. Press START.

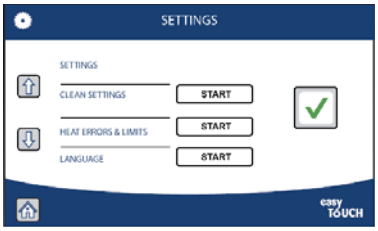

4. Select the language and then press the checkmark.

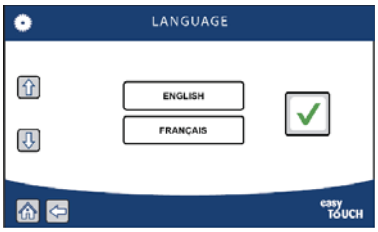

5. A pop-up window appears when the new setting is saved.

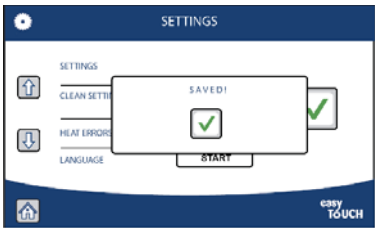

TIP:

Use the WORLD icon for a LANGUAGE selection short cut.

IMPORT/EXPORT (FROM USB)

This function allows user to Import Recipes From USB, Export Recipes To USB, and Export System Logs to USB.

NOTE: Export recipes to a USB flash drive for back up every time after a recipe is revised or added.

NOTE:

1. Must have a formatted USB key.

2. Select SETTINGS from HOME screen.

3. Enter the password.

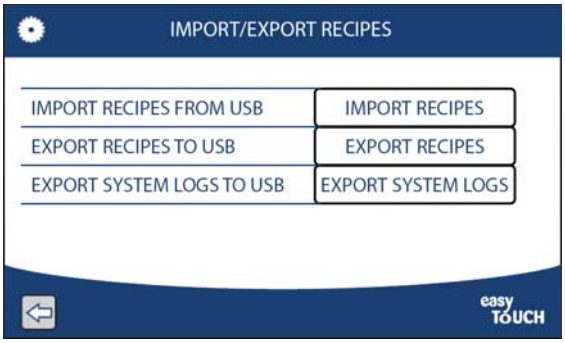

Downloads or uploads recipes to other units as necessary from an external USB memory or internal memory. Each controller's menu is independent for importing and exporting information.

IMPORT RECIPES	**IMPORT RECIPES** will copy the recipes setting from USB into a grill.
EXPORT RECIPES	**EXPORT RECIPES** will copy used grill recipes into the USB memory.
EXPORT SYSTEM LOG	**EXPORT SYSTEM LOGS** will copy all the logs from the internal grill memory into a USB.

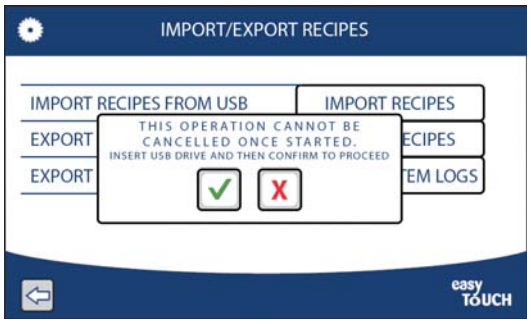

4. Selecting "IMPORT RECIPES" — "EXPORT RECIPES" — "EXPORT SYSTEM LOG" a pop-up window displayed to confirm either to proceed or cancel.

5. Insert the USB, select check mark and Grill automatically will import or export your recipe.

6. When the IMPORT/ EXPORT (FROM USB) is completed, the controller will go back to import/export recipes screen option.

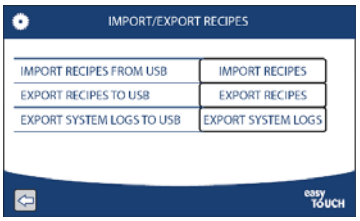

7. When EXPORT SYSTEM LOG is completed, a complete sign is displayed that gives the option to safely remove the USB. NOTE: Interruption will lead to lost data or damaged drives.

8. Try a different USB key if error is shown: "FAILED: PLEASE CHECK USB DRIVE."

9. TO exit, select back arrow

SLEEP CONFIGURATION

The grill can be configured to enter Sleep mode automatically after a period of inactivity.

1. Select SETTINGS from HOME screen.

2. Enter the password and press RETURN.

3. Use down arrow to scroll to SLEEP CONFIGURATION. Press START.

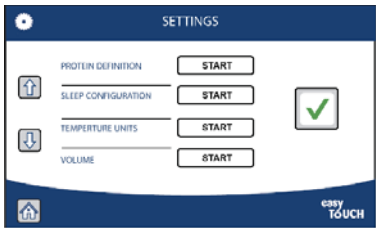

4. Press the button next to AUTO SLEEP to turn it on or off.
   If required, set allowable time for inactivity before auto sleep starts.
   Press ✓ to save new setting.

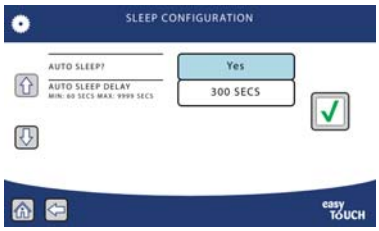

VOLUME ADJUSTMENT

Factory default volume is set to high (recommended).

1. Select SETTINGS from HOME screen.

2. Enter the password and press RETURN.

3. Use down arrow to scroll to VOLUME. Press START next to VOLUME.

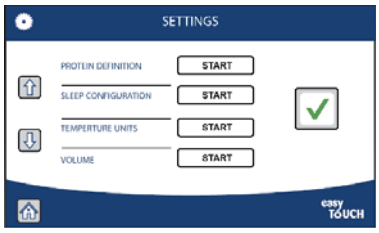

4. Press the button next to volume. Select option Low, Med or High.
   Press ✓ to save new setting.

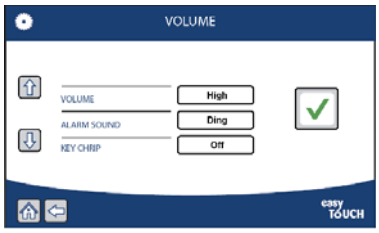

USER INTERFACE

This function allows the option to start cook cycle using only the GREEN PUSH BUTTON.

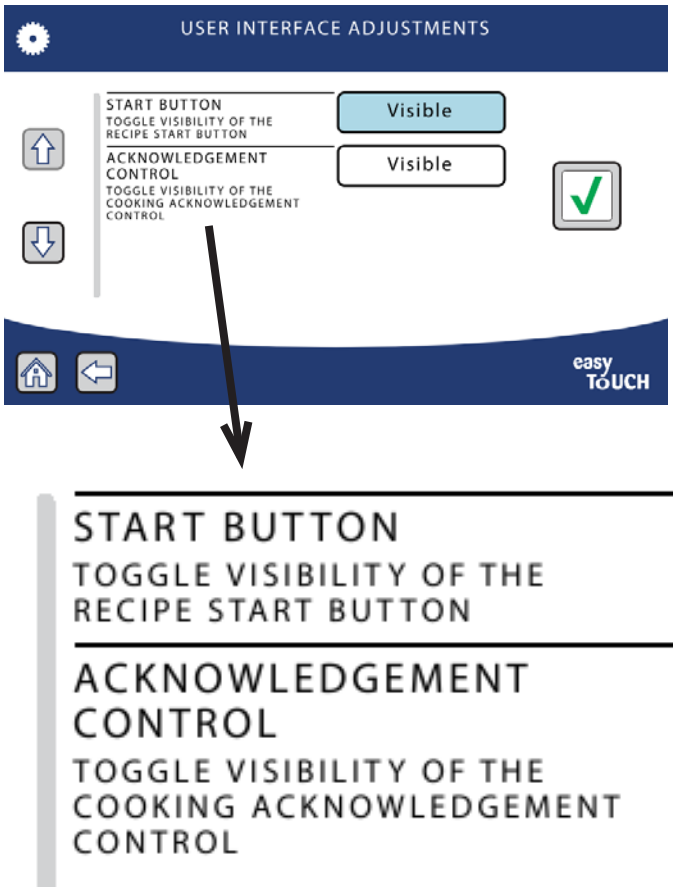

PLATEN CALIBRATION

This function is available to Store Manager, manually, to capture data or to run auto calibration process.

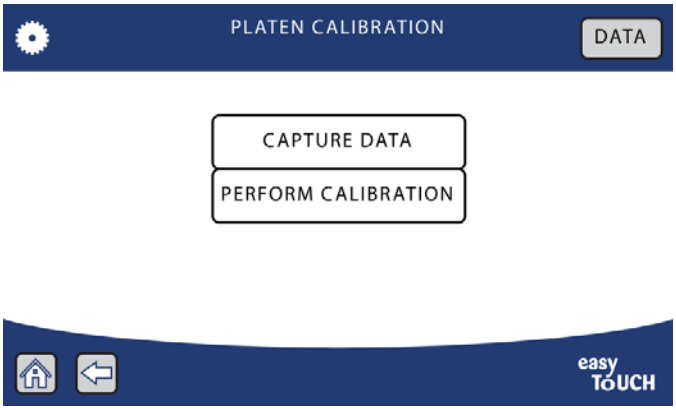

DATA

Press DATA icon to show platen level data captured previously.

CAPTURE DATA

This function will first preheat the grill. After preheat, the upper grate will move down to touch the lower grate. The sensors will then capture the platen level data required.

PERFORM CALIBRATION

This function will first preheat the grill. After preheat, the upper grate will move down to touch the lower grate. The sensors will then capture the platen level data required.

Follow on screen instructions to finish, to re-calibrate and perform grill zero routine, or to acknowledge adjustment required.

IMPORTANT: Contact Garland CFA Hot-Line if gapping or adjustment is required. All service work must be performed safely by Factory Authorized Service Technicians.

SOFT RESET

This is also called "Reset Lane" on display.

This function reboots the controller only. It does not turn the grill off; it does not reset to defaults.

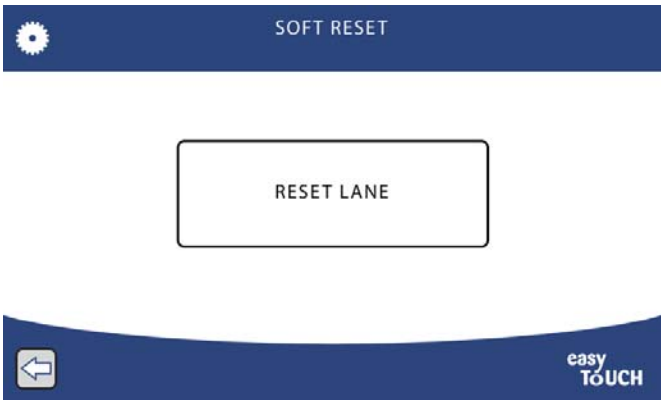

Diagnostics

ADVANCED—COMPONENT LIFE TRACING

This section contains life cycle data of important components of the grill.

NOTE:

RESET function is NOT ENABLED for Store Manager.

Detailed information on component life expectancy can be found by selecting DETAILS.

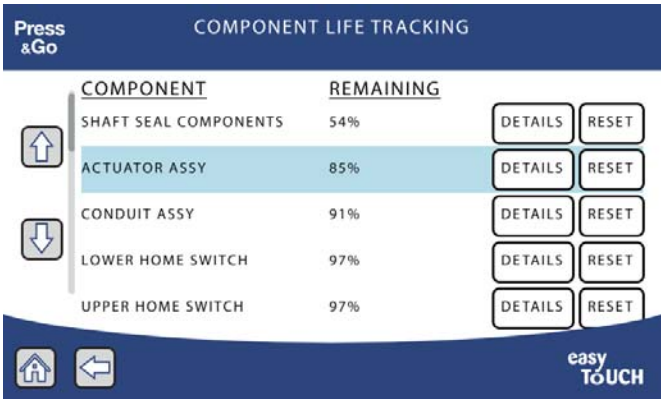

Section 4
Cleaning & Maintenance

Notice

Always check with Chick-fil-A store manager for latest cleaning method.

⚠Warning

To avoid burn injuries, handle the grease drawer and the contents carefully. Use Personal Protective Equipment (PPE).

ALL shields can get very hot during or after operation. Handle with care and use PPE.

Warning: Always disconnect electrical power before cleaning accessible panels.

⚠Warnings

The appliance generates significant amounts of heat and the operator should take care when touching accessible surfaces that are likely to get hot. Areas close to the cooking surface including side panels may get hot enough to burn skin.

⚠Warnings

Electrical Hazard

Turn Off power switch and unplug when cleaning the side or front or back panels of the grill.

Refrain from touching anything electrical when you've got wet hands or bare feet.

Do not remove any panel for cleaning.

⚠Warnings

Do not clean the unit with a power washer. This appliance is not approved for power washing.

Do not cool off a hot broiler with ice. The use of ice may damage the broiler grate castings.

Do not pour or spray liquids onto grill or risk of damaging the electronics.

Do not use abrasive cleaners, steel-wool pads or abrasive paper towels to clean the display screen, as bristles will scratch the screen surface

⚠CAUTION

Grease Drawer

Monitor the grease level in the grease drawer. Empty the grease drawer as required.

To avoid burn injuries, handle the grease drawer and the contents carefully. Use Personal Protective Equipment (PPE).

Moving the Grill

⚠Caution

Ensure platens are down, in closed position, when moving grill. Avoiding procedure may cause damage or loss of calibration on the platen and potential of error message can occur.

1. If required, turn power switch ON (green light on) and press the round green button to lower platen.
2. Turn power switch OFF (green light off).
3. If required, remove or empty grease drawer and oil pan before moving grill to avoid grease spill.
4. If possible to unplug safely, unplug the power cord before moving grill. Otherwise, unplug after moving grill forward (step 6).
5. Release front casters brake.
6. Move and steer grill using the side handles.

   DO NOT move grill using the screen guard or risk of damaging the front panel.

   DO NOT move grill using the platen / platen arm / conduit or risk of damaging the components.

   DO NOT move grill by grabbing onto the grill plate as grill temperature might still be high enough to cause injuries.

⚠CAUTION

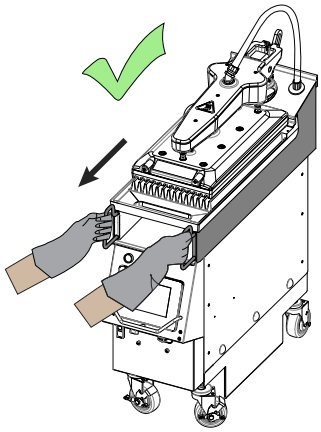

MOVE GRILL
USING THE SIDE HANDLES.

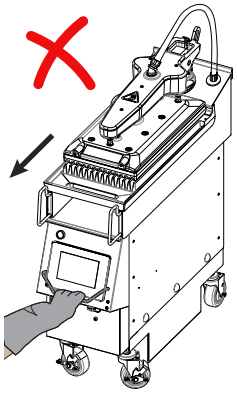

DO NOT MOVE GRILL
USING THE SCREEN GUARD.

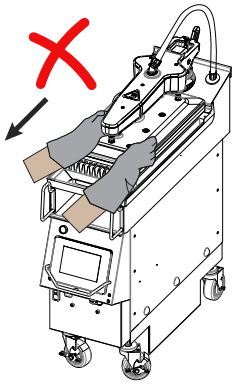

DO NOT MOVE GRILL
USING THE PLATEN OR ARM.

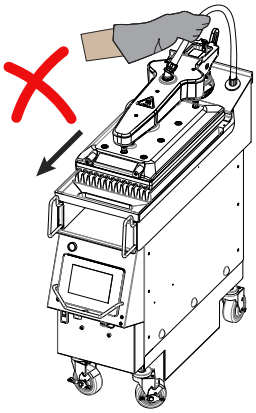

DO NOT MOVE GRILL
USING THE CONDUIT.

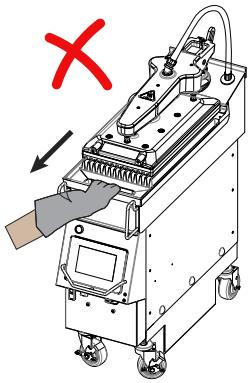

DO NOT MOVE GRILL
USING THE GRILL PLATE.

Cleaning Procedure

- A comprehensive cleaning procedure has been developed by Chik-fil-A to maintain the equipment at top working condition and to prolong product life cycle.
- Only authorized personnel are given access to the details on the Chick-fil-A website. Website is password protected.
- Ensure to follow all safety requirements listed in this manual and specified by CFA.
- Always refer to the CFA website for the latest instructions.
- This section summarizes the main process on cleaning a Garland Backyard Grill.

⚠CAUTION

NO CLEANING CHEMICALS should ever be applied to the top or bottom grates.

Cleaning Schedule

- The top and lower grill plates are to be cleaned with grill brush between batches.
- Follow the CFA recommended cleaning schedule to clean and sanitize grill exterior throughout the day (once every 2 hours).
- Perform Midday Clean (after peak sales period) and End-of-Day Clean specified by CFA.

⚠CAUTION

Grease Drawer

Monitor the grease level in the grease drawer. Empty the grease drawer as required.

To avoid burn injuries, handle the grease drawer and the contents carefully. Use Personal Protective Equipment (PPE).

Cleaning after Each Batch

- Frequency: Every time immediately after product is removed
- Areas to clean: Top and bottom grill grates, and empty grease drawer as required.
- Method: Use the grill brush to remove burned food particles and then use the silicone squeegee side to pull the debris into the grease drawer.

⚠CAUTION

NO CLEANING CHEMICALS should ever be applied to the top or bottom grates.

- Benefits: To prevent food residues to bake onto grates causing excessive carbon build-up.

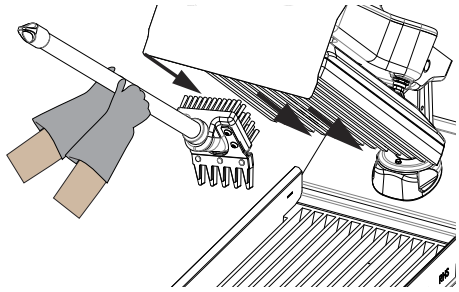

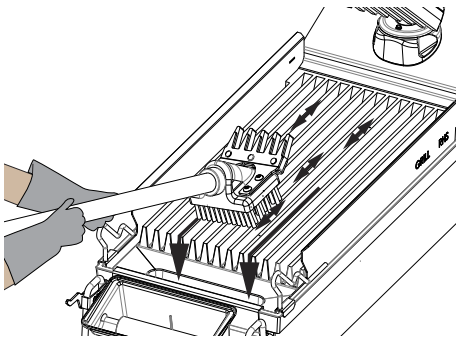

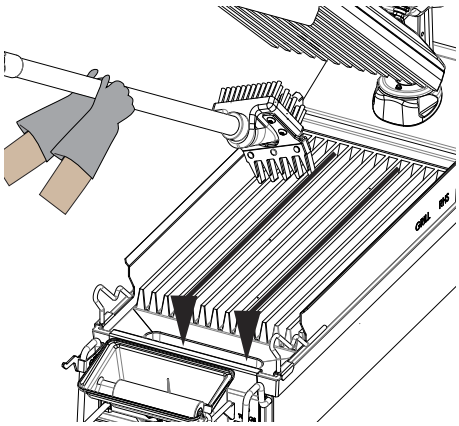

Cleaning and Sanitizing Grill Exterior

- Frequency: Every 2 hours throughout the day.
- Areas to clean: Front Panel, Display Screen, Sides, Platen Top and Platen Arm Cover.
- Method: Spray degreaser solution onto a damp, clean, sanitized towel and then wipe down the exterior. Repeat process with sanitizer and leave for specified time to kill bacteria. Remove excess degreaser/sanitizer with the clean side of the towel after each process.
- Benefits: To reduce significantly the oil and carbon build-up. This also reduces risk of cross-contamination from raw chicken juices that may drip onto the display screen.

NOTE:

- Before cleaning the display screen, press lock icon on screen to temporarily lock the touch screen.
- Use damp towel only; wiring out the towel well.
- The sanitizer must be left on the front panel for 60 seconds to kill any remaining bacteria.
- **DO NOT spray solution directly onto the screen or other surfaces.**

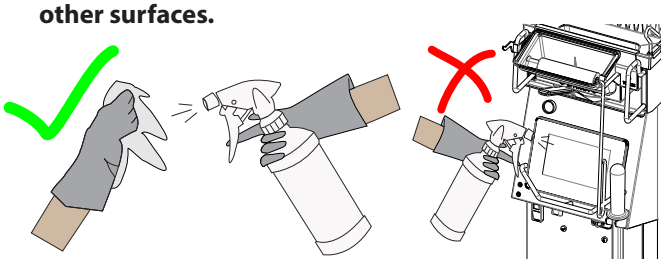

Cleaning Grill at Midday

- Frequency: Once a day after peak meal time.
- Areas to clean: Top Grate, Bottom Grate, Plastic Oil Pan, Oil Roller, Grease Drawer, Grill Brush, CFA's Metal Spatula
- Method:

1. Use Detailing Tool to scrape grooves and the cook surfaces.

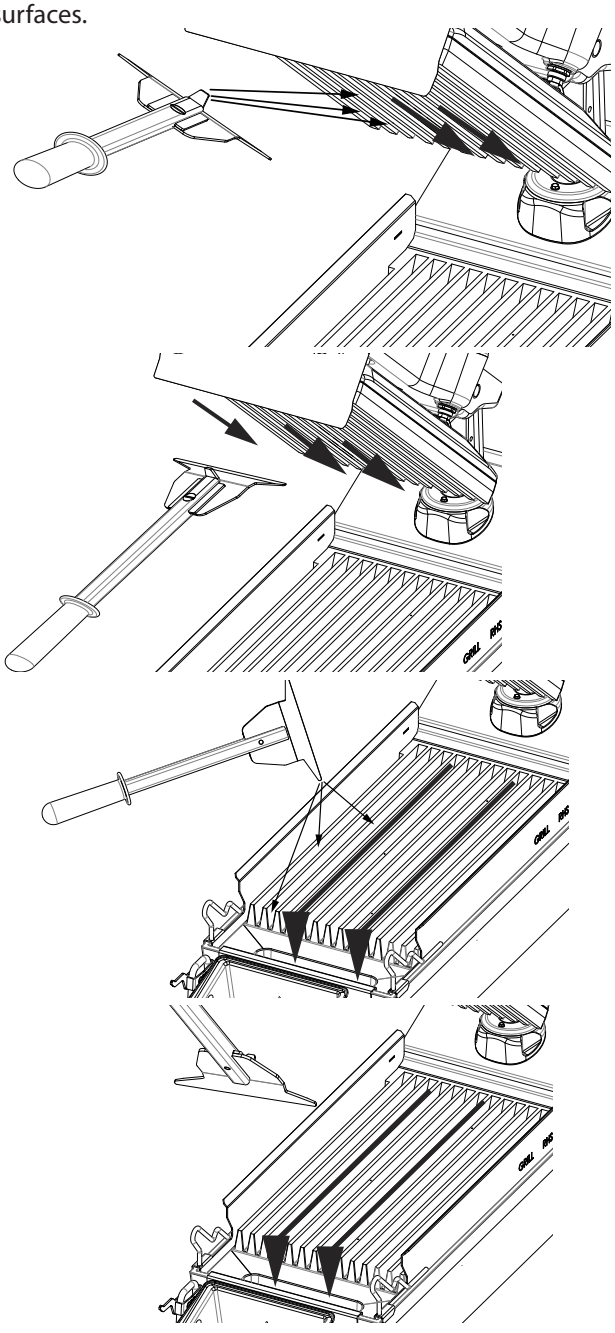

2. Use the grill brush to remove burned food particles and then use the silicone squeegee side to pull the debris into the grease drawer.

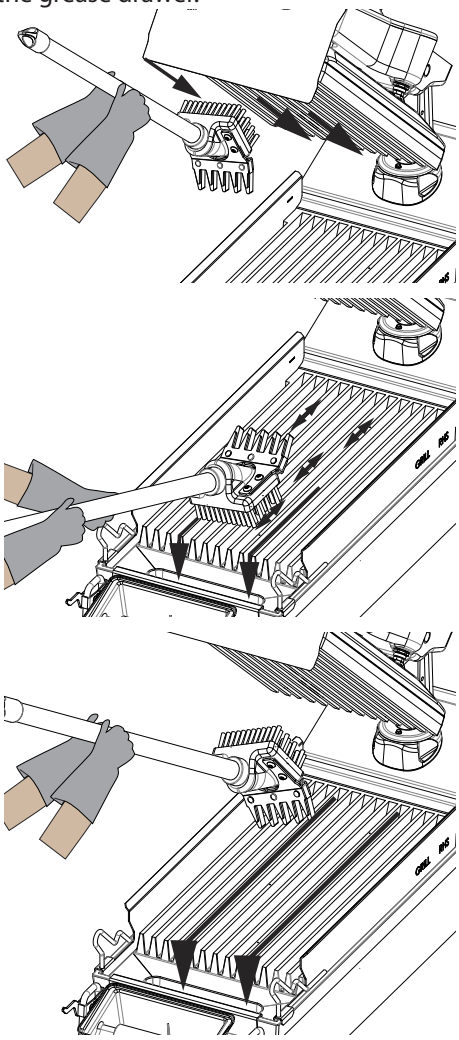

3. Use a damp, clean, sanitized towel to wipe cooking surfaces of upper and lower grates to remove all remaining debris.

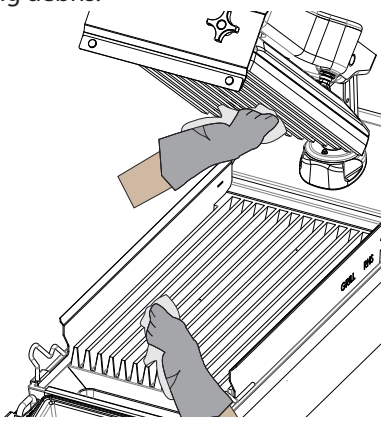

4. Other items to clean at Midday include:
   - Plastic Oil Pan and Oil Roller
     - NOTE: Ensure the foam head of the oil roller is clean and dry.
   - Grease Drawer
   - Grill Brush (if spicy filets have been cooked on grill)
     - **NOTE**: After cleaning, operator must shake off from brush, as much excess water as possible because water from brush can cause grill to corrode.
   - CFA's Metal Spatula

End of Day Cleaning

⚠CAUTION

To avoid burn injuries, allow grill to cool before cleaning:

1. Press the GREEN button to raise the platen.

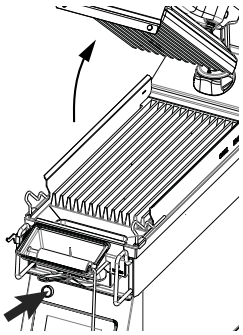

2. Turn grill power switch OFF (green Light OFF). **Allow grill to cool for approximately 20 minutes.**

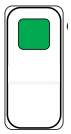

NOTE:

- Use damp towel only; wiring out the towel well.
- **DO NOT spray solution directly onto the screen or other surfaces.**

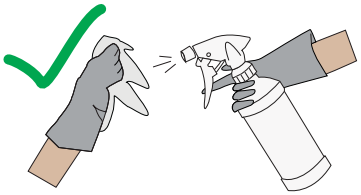

AREAS OF GRILL TO CLEAN

Upper and Lower Grill Grates

- Use detailing tool, grill brush, and a damp, sanitized towel to clean.
- Wipe lower grate area surrounding the grease drawer as well.

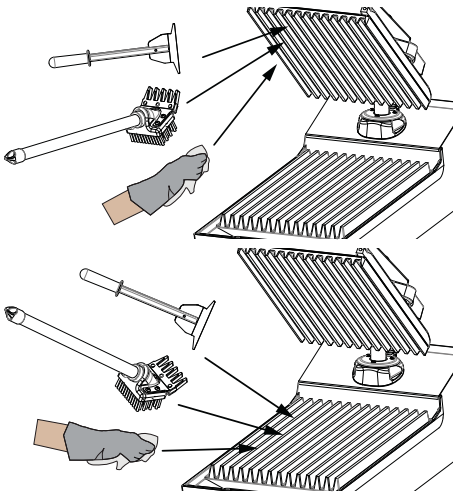

Platen Wear Plates

- Excess carbon and grease build-up in this area may affect upper platen leveling and alignment to the lower grill grate.
- Use degreaser on a clean, sanitized towel to clean.

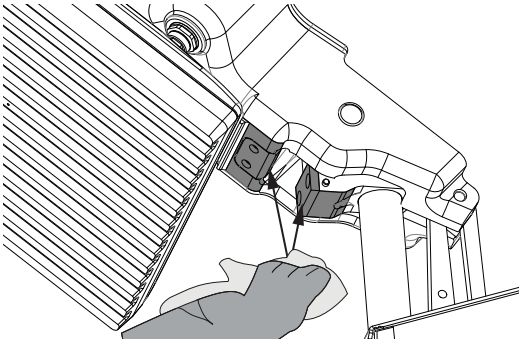

Backsplash Surface of Grill

- Wipe the backsplash area with a clean, sanitized towel. For stubborn build-up, spray super contact cleaner on a damp, clean, sanitized towel to clean.

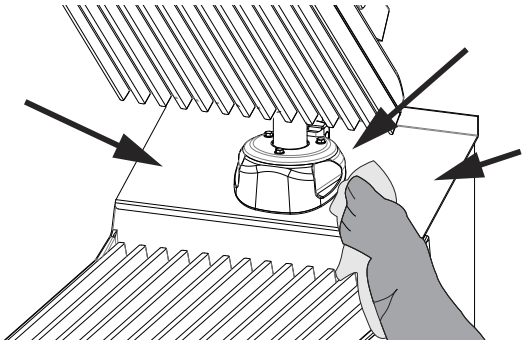

Metal Edges around Upper and Lower Grates

- Use super contact cleaner on a clean, sanitized towel to clean thoroughly.
- **NOTE: DO NOT get super contact cleaner on grill grates.**

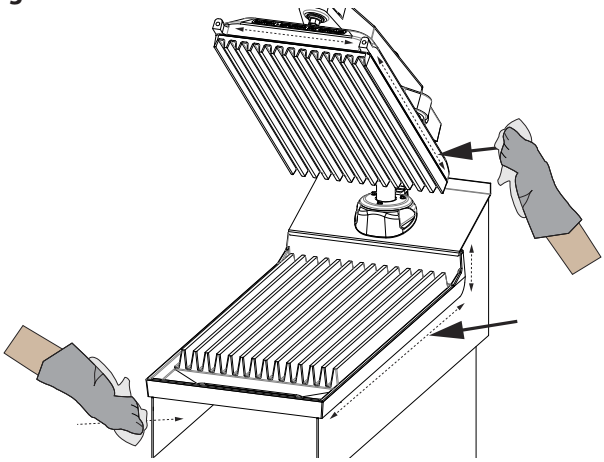

Exterior Metal Surfaces

- Use super contact cleaner on a damp, clean, sanitized towel to clean thoroughly.

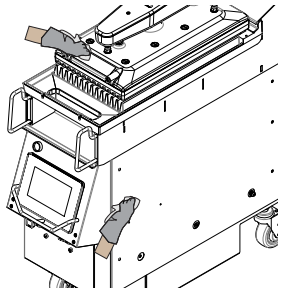

Platen Sensors and Sensor Targets

- The sensors on the platen arm measures and validate the leveling of the platen. Grease or carbon build-up on the sensors and targets will prevent the sensors from sensing the targets on the platen top properly. Errors might occur when the sensors cannot read the targets.
- To clean, insert a clean damp towel in between the sensor and target. Then move the towel back and forth to wipe the underside of the sensor and top of the target.
- NOTE: DO NOT USE CHEMICALS.

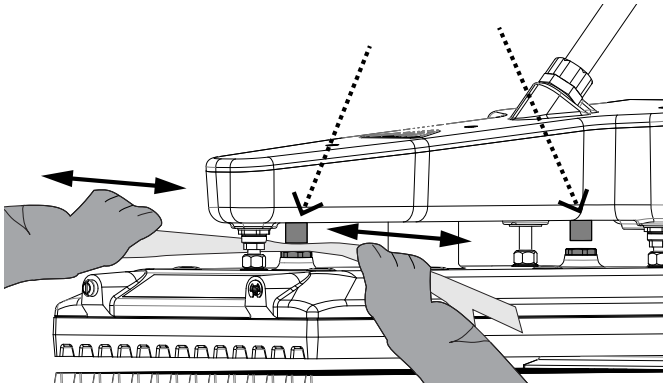

Display Screen and Screen Guard

- Use degreaser on a damp, clean, sanitized towel to clean thoroughly.

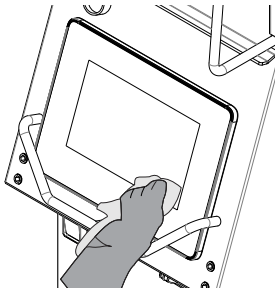

Upper Platen Seam

- Keeping the seam clean reduces chances of grease ingress into the sealed area. Do not neglect the rear area of the platen.
- Use degreaser on a damp, clean, sanitized towel to clean thoroughly. Then sanitize the same area.

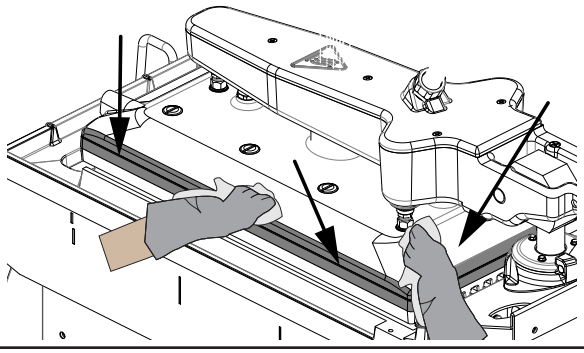

TOOLS AND ATTACHMENTS TO CLEAN

Operators to follow the instructions specified by Chick-fil-A to clean tools and attachments of the grill (shown below) at end of day:

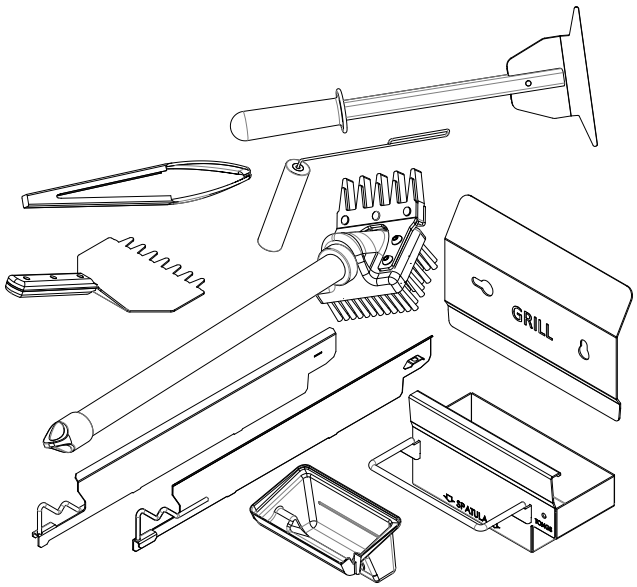

NOTES on Tools Replacement

- Discard foam head of oil roller when it becomes worn (e.g. when it has holes or tears) and replace it with a new one.

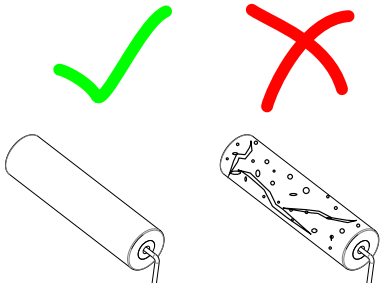

- Replace the grill brush head when the silicone portion of the brush has worn out and the stainless steel portion touches the grill grate.

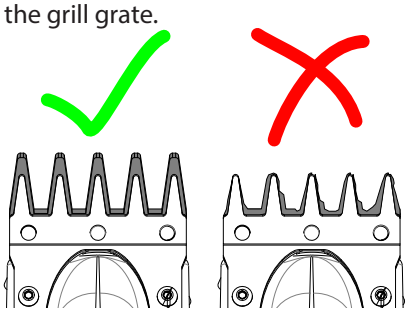

Annual Grill Certification

BENEFITS

Garland has developed a CFA Garland Grill Certification program that encompasses a series of important service tasks, if performed annually, will provide our customers consistent cooking performance on grill, increase grill reliability and life cycle, and most importantly, ensure safety is maintained at the highest standard.

TASKS AND PARTS

The yearly certification program includes scheduling and dispatching by Garland, a Factory Authorized Service Agent to perform a specific list of service tasks.

Overview of tasks:

- Inspect and Record the Existing State of the Grill
- Perform Mandatory Part Replacement
    - Replacement parts are wearable and limited life parts. Parts required will vary each year based on the units time in the field.
- Validate Grill Performance
- Validate Cooking Performance

Exclusions:

Replacement parts for any items that are not specifically listed as mandatory annual replacement. Items found to be defective during the Certification check will be identified to the responsible store manager for their evaluation.

If non-warranty or out of warranty repair is required, the Factory Authorized Service Agent must provide the store manager a quote for repair decision.

Section 5
Troubleshooting

Notice

For Service Suport, Call

Garland CFA Hot-Line: 1-800-379-7278

Store owners and employees are prohibited to perform any service operations on the appliance.

When Problem Occurs

- Use the table below to record the details of the problem, error message, and the situation.
- This information is valuable to technician and manufacturer for solving the problem.

Problem occurred on DATE: TIME: AM / PM	
DISPLAY	Error Code? _____ Error message on display: No error message or errors shown..... ☐
SITUATION	Describe the situation under which the malfunction occurs. Did same or similar problem occur before. YES ☐ NO ☐ If YES, frequency? • Just once..... ☐ • Occasionally..... ☐ • Repeatedly..... ☐
	State of the grill? The problem occurs: • After switching on the grill (before cooking, before pre-heating)..... ☐ • When the grill was cooking ..... ☐ • When the grill was pre-heating ..... ☐ • Other. Please describe:

Error Messages On Display

When problem occurs, the display may show an error code and on-screen instructions.

- User has to discard any laid product and call for service immediately. Grill is locked and not functional. (below, an example)

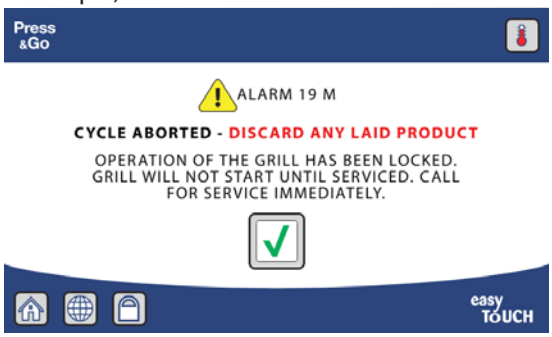

- User has to discard any laid product, acknowledge the error and return to HOME screen. It is important to call service if problem continues. (below, an example)

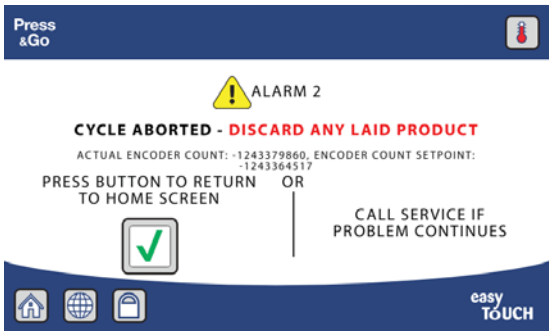

- User has to wait. (below, an example)

Retrieving Error Codes On Display

1. From Home Screen, press Diagnostics.

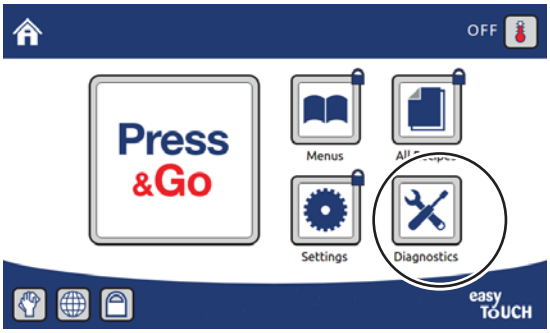

2. From Diagnostics screen, press START next to "Diagnostics Log".

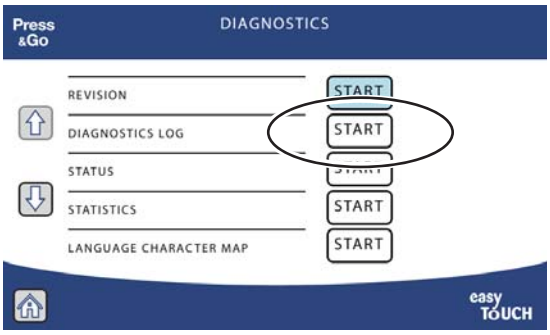

3. Use the up / down arrows on the left to scroll.

   The newest information is shown at the top (line "0"). Ensure to check time-stamps.

   Note important information: **Time, Error code**.

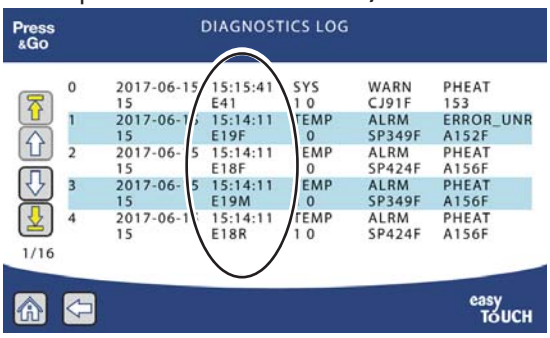

Cooking Issues

Problem:

- Product is undercooked / overcooked.
- Product appearance is not satisfactory.

Troubleshooting:

- To determine if there is an issue with grill, a product integrity test is important, as well as recording the heater temperatures.

1. Perform product integrity test on grill chicken with full load, and check heater temperature on UI:

   A. Record product temperatures (right, fill in temperatures).
   (Note: Target temp 175F to 185F. Min temp allowed 165F. Max temp 205F).

   NOTE:

   If product temperature is within the guideline, then the grill cooks per specification.

   B. Press Temperature icon and record heater temperatures:

	ACTUAL	SETTING
Top Front		
Top Back		
Bottom Front		
Bottom Mid		
Bottom Back		

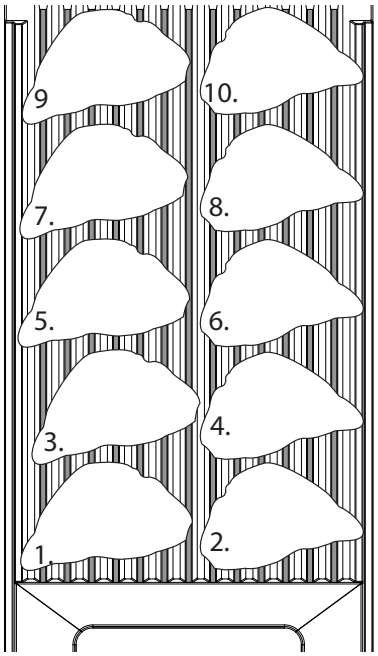

   NOTE:

   If actual temperatures are too low / too high (out of range of +/- 20 °F) or heaters are unable to reach temperatures, call Factory Authorized Service Agent.

2. Possible issues when product temp too low / too high:

	Possible Issues	**Action**
Product Temp Too Low at Front of Grill	Kitchen ventilation affecting temperatures.	Check whether cool or high volumes of air are directed towards the broiler
	Front smoke deflector and side skirts are not installed or not installed properly.	Refer to Section 3 Operation of this manual.
	Grill needs service/calibration.	Call Factory Authorized Service Agent.

	Possible Issues	Action
Product temp too low	Product was not completely thawed before cooking.	Refer to CFA operational guideline. Raw product temperature must be maintained at 35F to 40F before cooking.
	Product was not correctly filleted.	Refer to CFA operational guideline.
	Products were positioned incorrectly or overlapping on grill.	Refer to CFA operational guideline.
	Recipe settings was changed (cook time, gap, temperature etc.)	Inspect recipe settings.
	Excessive carbon build-up on grates.	Clean grates. Refer to CFA operational guideline.
	Grill needs service/calibration.	Call Factory Authorized Service Agent.
Product temp too high	Product was too warm before cooking.	Refer to CFA operational guideline. Raw product temperature must be maintained at 35F to 40F before cooking.
	Product was not correctly filleted.	Refer to CFA operational guideline.
	Used +45 sec button after cook cycle or recipe settings was changed (cook time, gap, temperature etc.)	Inspect recipe settings.
	Grill needs service/calibration.	Call Factory Authorized Service Agent.

3. If cooking problem is not consistent or reproducible from a product integrity test (Step 1), other possible issues might include:
   - Incorrect recipe was selected.
   - Run size too high.
   - Cook cycle stopped/aborted early by operator.
   - Grates are needed to be cleaned and ensure grates are free of debris and carbon.

Display Screen / User Interface (UI) Controller Issues		
• Some issues with the display device can be resolved by using the functions in easyTOUCH SETTINGS (password protected). Use the table below to locate the proper action required.		
Problem	**Possible Cause**	**Action**
No sound	Volume set too low	Set volume to high
	Speaker wiring incorrect	Call Factory Authorized Service Agent.
	Display screen controller audio defective	
	Speaker defective	
Screen isn't lit. Screen is blank.	Main power lost: If grill power switch is ON but power switch green light is not lit, no power to grill.	Check power supply to the appliance. If power supply is not the issue, call Factory Authorized Service Agent.
	If unit is ON and power button is lit, problem with UI or UI connection.	Call Factory Authorized Service Agent.
Screen is dim or very dark.	Problem with UI.	Call Factory Authorized Service Agent.
Screen is locked out. Screen is frozen Screen is non-responsive to touch.	Software issue	Turn OFF grill power switch. Wait for 10 seconds and then turn ON grill. If rebooting the controller does not work, call Factory Authorized Service Agent.
Display screen is rebooting.	Main power intermittent.	Check power supply to the appliance. If power supply is not the issue, call Factory Authorized Service Agent.
	Problem with UI or software.	Call Factory Authorized Service Agent.
	24V power supply defective	
Display screen is cracked.	Damage in transit or in-store.	Turn OFF grill. Call Factory Authorized Service Agent.
Wrong icon / letter is responded to touch. Touch area is mapped incorrectly.	Display screen mapping is off.	Call Factory Authorized Service Agent to perform TOUCHSCREEN CALIBRATION.
Unable to read or connect to external USB flash drive.	Flash drive is not in long enough	Allow 30 seconds for USB to be recognized by the UI controller.
	Flash drive is not recognized	Retry with a known good flash drive
	Flash drive faulty	
	Flash drive set to read only	
	USB cable is disconnected.	Call Factory Authorized Service Agent.
Unable to upload files from USB flash drive. Unable to download files to USB flash drive.	Flash drive faulty	Retry with known good flash drive
	Files on flash drive incorrect or corrupt or in zipped file format.	Reload good files or uncompress files on USB flash drive and try again.
	USB cable is disconnected.	Call Factory Authorized Service Agent.

Blank Page

Blank Page

GARLAND
1177 KAMATO ROAD, MISSISSAUGA, ONTARIO, CANADA, L4W1X4
888-442-7526
WWW.GARLAND-GROUP.COM

WELBILT®
Bringing innovation to the table

WWW.WELBILT.COM

Welbilt provides the world's top chefs, and premier chain operators or growing independents with industry leading equipment and solutions. Our cutting-edge designs and lean manufacturing tactics are powered by deep knowledge, operator insights, and culinary expertise.
All of our products are backed by KitchenCare® – our aftermarket, repair, and parts service.

- CLEVELAND
- CONVOTHERM®
- DELFIELD®
- FITKITCHEN™
- FRYMASTER®
- GARLAND
- KOLPAK®
- LINCOLN
- MANITOWOC®
- MERCO®
- MERRYCHEF®
- MULTIPLEX®

©2017 Welbilt Inc. except where explicitly stated otherwise. All rights reserved. Continuing product improvement may necessitate change of specifications without notice.